GoTriangle RFQ 24-048

Exhibit A

BOMF Building Additions 2008

(33 pages - including this page)

COMMON ABBREVIATIONS

#	NUMBER
%	PERCENT
<	LESS THAN
=	EQUALS
>	GREATER THAN
@	AT
A/E	ARCHITECT/ENGINEER
ABV	ABOVE
ACI	AMERICAN CONCRETE INSTITUTE
ACM	ASBESTOS CONTAINING MATERIAL
ACT	ACOUSTICAL CEILING TILE
AD	ACCESS DOOR
ADA	AMERICANS WITH DISABILITIES ACT
ADJ	ADJUSTABLE
AFC	ABOVE FINISHED CEILING
AFF	ABOVE FINISHED FLOOR
AFG	ABOVE FINISHED GRADE
AIA	AMERICAN INSTITUTE OF ARCHITECTS
ALUM	ALUMINUM
ANSI	AMERICAN NATIONAL STANDARDS INSTITUTE
AP	ACCESS PANEL
APPROX	APPROXIMATE
ARCH	ARCHITECT
ASTM	AMERICAN SOCIETY FOR TESTING & MATLS
AUX	AUXILIARY
AVG	AVERAGE
BFC	BELOW FINISHED CEILING
BFF	BELOW FINISHED FLOOR
BFG	BELOW FINISHED GRADE
BLDG	BUILDING
BOC	BACK OF CURB
C/C	CENTER TO CENTER
CIP	CAST IN PLACE
CL	CENTERLINE
CL EL	CENTERLINE ELEVATION
CLG	CEILING
CLR	CLEAR
CMU	CONCRETE MASONRY UNIT
COL	COLUMN
CONC	CONCRETE
CONST	CONSTRUCTION
CONT	CONTINUOUS
CONTR	CONTRACTOR
CORR	CORRIDOR
CSI	CONSTRUCTION SPECIFICATION INSTITUTE
CU FT	CUBIC FEET
CU IN	CUBIC INCH
CU YD	CUBIC YARD
DEMO	DEMOLITION
DIA	DIAMETER
DIAG	DIAGONAL
DIV	DIVISION
DN	DOWN
DWG	DRAWING
EA	EACH
ELEC	ELECTRICAL
EC	ELECTRICAL CONTRACTOR
EWC	ELECTRIC WATER COOLER
EJ	EXPANSION JOINT
ELEV	ELEVATION
EPA	ENVIRONMENTAL PROTECTION AGENCY
EQ	EQUAL
EQPT	EQUIPMENT
EW	EACH WAY
EXSTG	EXISTING
EXT	EXTERNAL OR EXTERIOR
FAO	FINISH ALL OVER
FBO	FURNISHED BY OWNER
FIN	FINISHED
FFE	FINISHED FLOOR ELEVATION
FG	FIBERGLASS
FE	FIRE EXTINGUISHER
FIN	FINISH
FL. FLR	FLOOR
FRP	FIBERGLASS REINFORCED POLYESTER
FT	FEET
FWE	FURNISHED WITH EQUIPMENT
GALV	GALVANIZED
GC	GENERAL CONTRACTOR
GL	GLASS
GRAV	GRAVITY
GWB	GYPSUM WALL BOARD
GS	GALVANIZED STEEL
GSA	GENERAL SERVICES ADMINISTRATION
HDG	HOT DIP GALVANIZED
HORIZ	HORIZONTAL
IAW	IN ACCORDANCE WITH
ID	INSIDE DIAMETER
IN	INCHES
INS	INSULATION
INV EL	INVERT ELEVATION
LBS	POUNDS
LF	LINEAR FEET
LG	LONG, LENGTH, LARGE
LIQ	LIQUID
MATL	MATERIAL
MAX	MAXIMUM
MC	MECHANICAL CONTRACTOR
MECH	MECHANICAL
MER	MECHANICAL EQUIPMENT ROOM
MHT	MOUNTING HEIGHT
MIN	MINIMUM
MISC	MISCELLANEOUS
MM	MILLIMETER
MSDS	MATERIAL SAFETY DATA SHEET
N/A	NOT APPLICABLE
NIC	NOT IN CONTRACT
NO	NUMBER
NOM	NOMINAL
NPS	NOMINAL PIPE SIZE
NTS	NOT TO SCALE
OD	OUTSIDE DIAMETER
OPP	OPPOSITE
OPNG	OPENING
OSHA	OCCUPATIONAL SAFETY & HEALTH ADMIN
OU	OUTDOOR UNIT
OZ	OUNCE
PC	PLUMBING CONTRACTOR
PLAM	PLASTIC LAMINATE
PLWD	PLYWOOD
PSI	POUNDS PER SQUARE INCH
QA	QUALITY ASSURANCE
QTY	QUANTITY
REF	REFERENCE
REINF	REINFORCE, REINFORCING
REQD	REQUIRED
REV	REVISION
RO	ROUGH OPENING
RM	ROOM
RPM	REVOLUTIONS PER MINUTE
SCH	SCHEDULE
SEC	SECTION
SIM	SIMILAR
SPEC	SPECIFICATIONS
SQ	SQUARE
SQ FT	SQUARE FEET
SQ IN	SQUARE INCH
SQ YD	SQUARE YARD
SS	STAINLESS STEEL
SSPC	STRUCTURAL STEEL PAINTING COUNCIL
STD	STANDARD
STL	STEEL
SUSP	SUSPENDED
T&G	TONGE AND GROOVE
TEL	TELEPHONE
TEMP	TEMPERATURE
THK	THICK
TOM	TOP OF MASONRY
TOS	TOP OF STEEL
TYP	TYPICAL
UG	UNDERGROUND
UL	UNDERWRITERS LABORATORY
UNF	UNFINISHED
UON	UNLESS OTHERWISE NOTED
VEL	VELOCITY
VIF	VERIFY IN FIELD
VOL	VOLUME
W	WIDTH
W/	WITH
WD	WOOD
WF	WIDE FLANGE
WT	WEIGHT
WWF	WELDED WIRE FABRIC
YD	YARD
YR	YEAR

ENGINEERING ABBREVIATIONS

ACU	AIR CONDITIONING UNIT
AD	ACCESS DOOR
ADA	AMERICANS WITH DISABILITIES ACT
CD	CEILING DIFFUSER
CIP	CAST IRON PIPE
CTG	CEILING TRANSFER GRILLE
CW	COLD WATER
DIFF	DIFFERENCE, DELTA
EXH	EXHAUST
EFF	EFFICIENCY
EG	EXHAUST GRILLE
EH	ELECTRIC HEATER
FCU	FAN COIL UNIT
FD	FIRE DAMPER, FLOOR DRAIN
G	GAS
GA	GAUGE
HB	HOSE BIBB
HDG	HOT DIP GALVANIZED
HDPE	HIGH DENSITY POLYETHYLENE
HP	HORSEPOWER, HEAT PUMP
HTG	HEATING
IU	INDOOR UNIT
JB	JUNCTION BOX
LAV	LAVATORY
LVR	LOUVER
LT	LIGHT
LTG	LIGHTING
MAU	MAKEUP AIR UNIT
NEC	NATIONAL ELECTRICAL CODE
NFPA	NATIONAL FIRE PROTECTION ASSOCIATION
NO	NORMALLY OPEN, NUMBER
NPS	NOMINAL PIPE SIZE
O&M	OPERATIONS AND MAINTENANCE
OA	OUTSIDE AIR
OAD	OUTSIDE AIR DAMPER
OD	OUTSIDE DIAMETER
OU	OUTDOOR UNIT
PE	PROFESSIONAL ENGINEER
PH	PHASE
PKG	PACKAGE
PSI	POUNDS PER SQUARE INCH
PTAC	PACKAGED TERMINAL AIR CONDITIONER
RA	RETURN AIR
RG	RETURN GRILLE
RPM	REVOLUTIONS PER MINUTE
SCFM	STANDARD CFM
SG	SUPPLY GRILLE
SR	SUPPLY REGISTER
ST	STORM
T	THERMOSTAT
TB	TERMINAL BOX
TEL	TELEPHONE
TEMP	TEMPERATURE
TG	TRANSFER GRILLE
UH	UNIT HEATER
UL	UNDERWRITERS LABORATORY
V	VOLTS, SANITARY VENT
VEL	VELOCITY
VOL	VOLUME
VTR	VENT THRU ROOF
W	WATTS, WIDTH
WR2	MOMENT OF INTERIA

ADDITIONS TO MAINTENANCE FACILITY

TRIANGLE TRANSIT AUTHORITY
NELSON ROAD
CARY, NORTH CAROLINA

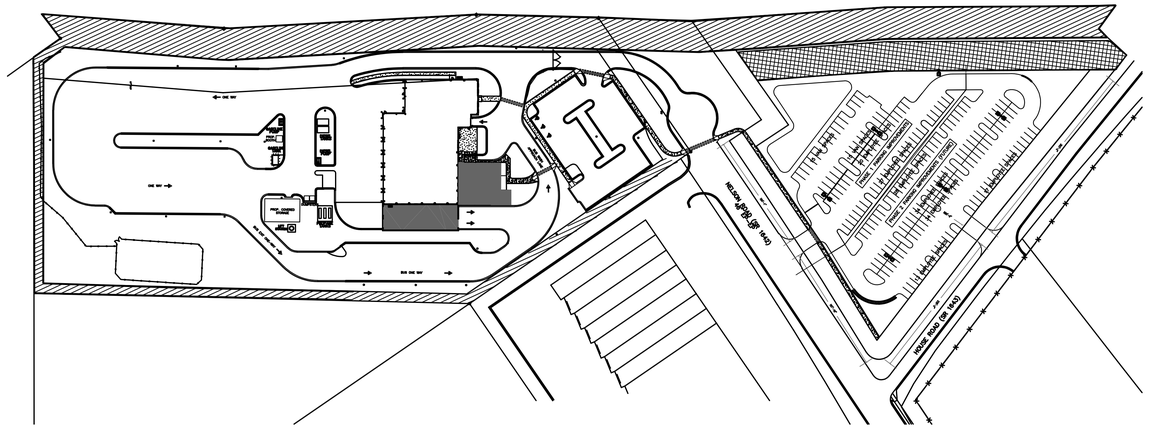

CONSTRUCTION DOCUMENTS SUBMITTAL

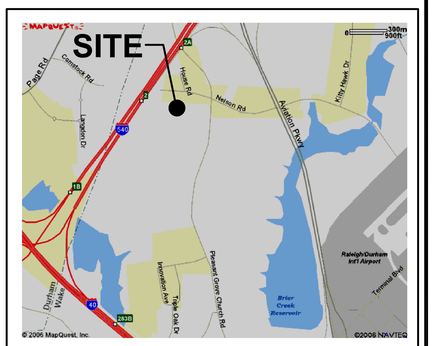

VICINITY MAP-1

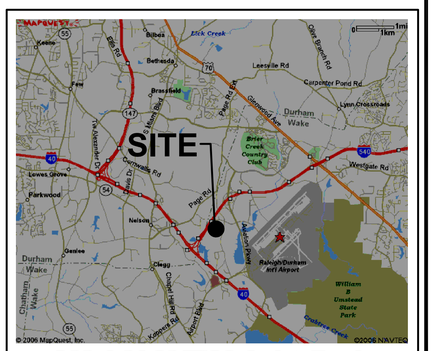

VICINITY MAP-2

INDEX TO DRAWINGS

GENERAL DRAWINGS
COVER SHEET
G1.1 BUILDING CODE SUMMARY, APPENDIX B & DEMOLIION PLAN

CIVIL DRAWINGS
SEPARATE PACKAGE

LANDSCAPE DRAWINGS
LA1.1 OVERALL LANDSCAPING PLAN
LA2.1 LANDSCAPING – DETAIL AREAS

ARCHITECTURAL DRAWINGS
A1.1 FLOOR PLAN, PARTITION SCHEDULE, WINDOW AND DOOR SCHEDULES, GENERAL NOTES
A2.1 CEILING FLOOR PLAN AND DETAILS
A3.1 ENLARGED TOILET PLANS, INTERIOR ELEVATIONS, CASEWORK DETAILS, FINSH PLANS AND SCHEDULE
A5.1 BUILDING ELEVATIONS
A6.1 BUILDING SECTIONS AND DETAILS
A6.2 BUILDING DETAILS
A7.1 ROOF PLAN AND DETAILS

STRUCTURAL DRAWINGS
S1.1 FOUNDATION PLAN
S1.2 ROOF FRAMING PLAN
S2.1 DETAILS AND NOTES
S2.2 DETAILS

FIRE PROTECTION DRAWINGS
F1.0 GENERAL NOTES AND DETAILS
F1.1 SPRINKLER SYSTEM FLOOR PLAN

PLUMBING DRAWINGS
P0.1 FIXT. SCHED., SYMBOLS, NOTES, LOAD SUMMARY
P1.1 FLOOR PLAN – PLUMBING
P2.1 ENLARGED AREA PLUMBING PLANS
P3.1 PLUMBING DIAGRAMS AND DETAILS

MECHANICAL DRAWINGS
M0.1 GENERAL NOTES, LEGENDS AND ABBREVATIONS
M1.1 HVAC FLOOR PLAN
M1.2 PARTIAL HVAC ROOF PLAN AND PARTIAL DEMO. PLAN
M3.1 MECHANICAL SCHEDULES
M4.1 MECHANICAL DETAILS
M5.1 CONTROL SCHEMATICS

ELECTRICAL DRAWINGS
E1.1 SYMBOLS; LUMINAIRE SCHEDULE; DEMOLITION PLAN
EP1.1 FIRST FLOOR POWER PLAN
EL1.1 FIRST FLOOR LIGHTING PLAN
ES1.1 EXTERIOR LUMINAIRE SCHEDULE; SITE PLAN
E2.1 DETAILS

PROJECT DIRECTORY

OWNER REPRESENTATIVE:
TRIANGLE TRANSIT AUTHORIY
NELSON ROAD
CARY, NORTH CAROLINA
CONTACT: SHEELA PRABHU
PHONE: 919. 485.7507
EMAIL:

CIVIL REPRESENTATIVE:
MULKEY ENGINEERS & CONSULTANTS
P. O. BOX 33127
RALEIGH, NORTH CAROLINA 27636
CONTACT: MICHAEL ALLEN
PHONE: 919.851.1912
E-MAIL:

LANDSCAPE ARCHITECT:
MOSER MAYER PHOENIX ASSOCIATES
328 E. MARKET STREET, SUITE 200
GREENSBORO, NORTH CAROLINA 27401
CONTACT: ROBERT GRILL
PHONE: 336.373.9800
E-MAIL: grill@mmpa.com

ARCHITECT:
MOSER MAYER PHOENIX ASSOCIATES
328 E. MARKET STREET, SUITE 200
GREENSBORO, NORTH CAROLINA 27401
CONTACT: KENNETH C. MAYER, JR.
PHONE: 336.373.9800
E-MAIL: Ken@mmpa.com

STRUCTURAL ENGINEER OR DESIGNER:
MOSER MAYER PHOENIX ASSOCIATES
328 E. MARKET STREET, SUITE 200
GREENSBORO, NORTH CAROLINA 27401
CONTACT: PAUL BRECKNER
PHONE: 336.373.9800
E-MAIL: breckner@mmpa.com

MECHANICAL ENGINEER OR DESIGNER:
MOSER MAYER PHOENIX ASSOCIATES
328 E. MARKET STREET, SUITE 200
GREENSBORO, NORTH CAROLINA 27401
CONTACT: NINO SENNATI
PHONE: 336.373.9800
E-MAIL: sennati@mmpa.com

ELECTRICAL ENGINEER OR DESIGNER:
MOSER MAYER PHOENIX ASSOCIATES
328 E. MARKET STREET, SUITE 200
GREENSBORO, NORTH CAROLINA 27401
CONTACT: BO KIME
PHONE: 336.373.9800
E-MAIL: kime@mmpa.com

PLUMBING ENGINEER OR DESIGNER:
MOSER MAYER PHOENIX ASSOCIATES
328 E. MARKET STREET, SUITE 200
GREENSBORO, NORTH CAROLINA 27401
CONTACT: MIKE HEGE
PHONE: 336.373.9800
E-MAIL: mike@mmpa.com

FIRE PROTECTION DESIGNER:
MOSER MAYER PHOENIX ASSOCIATES
328 E. MARKET STREET, SUITE 200
GREENSBORO, NORTH CAROLINA 27401
CONTACT: RON DAVIS
PHONE: 336.373.9800
E-MAIL: ron@mmpa.com

MULKEY
ENGINEERS & CONSULTANTS
PO Box 33127
Raleigh, N.C. 27636
(919) 851-1912
(919) 851-1918 (FAX)
WWW.MULKEYINC.COM

MOSER MAYER PHOENIX
ASSOCIATES, PA
COMPLETE FACILITIES SOLUTIONS
328 E. Market Street
Suite 200
Greensboro, N. C. 27401
Telephone 336-373-9800
Fax 336-373-0077

RECORD DRAWING DISCLAIMER
TO THE BEST OF OUR KNOWLEDGE, THESE DRAWINGS HAVE BEEN REVISED TO REFLECT CHANGES MADE DURING THE CONSTRUCTION PROCESS, BASED UPON THE MARKED-UP DRAWINGS AND OTHER DATA FURNISHED TO THE ARCHITECT BY THE CONTRACTOR OR CONTRACTORS. THE ARCHITECT DOES NOT ASSURE THE ACCURACY OF THAT INFORMATION OR TAKE RESPONSIBILITY FOR ANY ERROR OR OMISSION INCORPORATED INTO THE DRAWINGS AS A RESULT. THE OWNER IS ADVISED TO OBTAIN INDEPENDENT VERIFICATION PRIOR TO USING THE INFORMATION CONTAINED HEREIN.

APPENDIX B
BUILDING CODE SUMMARY
FOR ALL COMMERCIAL PROJECTS
(EXCEPT 1 AND 2-FAMILY DWELLINGS AND TOWNHOUSES)

(Reproduce the following data on the building plans sheet 1 or 2)

Name of Project: TRIANGLE TRANSIT AUTHORITY - ADDITIONS TO MAINTENANCE FACILITY
Address: NELSON ROAD, CARY, NORTH CAROLINA
Proposed Use: STORAGE S-1 (OFFICES AS ACCESSORY USE)
Owner or Authorized Agent: Sheela Prabhu Phone # 919-485-7507
Owned By: ☐ City/County ☒ Private ☐ State
Code Enforcement Jurisdiction: ☒ City ☐ County

LEAD DESIGN PROFESSIONAL:

DESIGNER	FIRM	NAME	LICENSE #	TELEPHONE #
Architectural	Moser Mayer Phoenix Associates	Kenneth Charles Mayer	4305	336-373-9800
Civil	Mulkey	Craig Wilson	21584	919-851-1912
Landscape	Moser Mayer Phoenix Associates	Robert Grill	441	336-373-9800
Electrical	Moser Mayer Phoenix Associates	Robert Kime	23990	336-373-9800
Fire Alarm	Moser Mayer Phoenix Associates	Robert Kime	23990	336-373-9800
Plumbing	Moser Mayer Phoenix Associates	Thomas Phoenix	11244	336-373-9800
Mechanical	Moser Mayer Phoenix Associates	Thomas Phoenix	11244	336-373-9800
Sprinkler-Standpipe	Moser Mayer Phoenix Associates	Thomas Phoenix	11244	336-373-9800
Structural	Moser Mayer Phoenix Associates	Paul Breckner	027680	336-373-9800
Retaining Walls >5' High				
Other				

YEAR EDITION OF CODE:
☒ New Construction ☒ Renovation (Existing Bldg) ☐ Upfit ☐ Alteration

BUILDING DATA
Construction Type: ☐ I-A ☐ I-B ☐ II-A ☒ II-B ☐ III-A ☐ III-B ☐ IV ☐ V-A ☐ V-B
Mixed construction: ☐ No ☐ Yes Types
Sprinklers: ☐ No ☐ Yes ☒ NFPA 13 ☐ NFPA 13R ☐ NFPA 13D
Standpipes: ☒ No ☐ Yes Class ☐ I ☐ II ☐ III ☐ Wet ☐ Dry
Fire District: ☒ No ☐ Yes
Building Height: 28 Feet One Number of Stories ☐ Unlimited per
New Mezzanine: ☒ No ☐ Yes (existing mezzanine to remain-see SF below)
High Rise: ☒ No ☐ Yes Central Reference Sheet # (if provided)
Gross Building Area:

FLOOR	EXISTING (SQ FT)	NEW (SQ FT)	SUB-TOTAL
1st Floor	23,548	9,476	33,024
Mezzanine	2,120	-	2,120
TOTAL AREA	25,668	9,476	35,144

ALLOWABLE AREA

Primary Occupancy: ☐ Assembly ☐ A-1 ☐ A-2 ☐ A-3 ☐ A-4 ☐ A-5
☐ Business ☐ Educational ☐ Factory-Industrial ☐ F-1 ☐ F-2
☐ High-Hazard ☐ H-1 ☐ H-2 ☐ H-3 ☐ H-4 ☐ H-5
☐ Institutional ☐ I-1 ☐ I-2 ☐ I-3 ☐ I-4
I-3 Use Condition ☐ 1 ☐ 2 ☐ 3 ☐ 4 ☐ 5
☐ Mercantile ☐ Residential ☐ R-1 ☐ R-2 ☐ R-3 ☐ R-4
☒ Storage ☒ S-1 ☐ S-2 ☐ High-piled
☐ Utility and Miscellaneous Parking Garage ☐ Open ☐ Enclosed ☐ Repair
Secondary Occupancy:
Special Occupancy: ☐ 508.2 ☐ 508.3 ☐ 508.4 ☐ 508.5 ☐ 508.6 ☐ 508.7 ☐ 508.8
Mixed Occupancy: ☒ No ☐ Yes Separation: Hr. Exception:

☒ Non-Separated Mixed Occupancy (302.3.2 Exception)
The required type of construction for the building shall be determined by applying the height and area limitations for each of the applicable occupancies to the entire building. The most restrictive type of construction, so determined, shall apply to the entire building.

☐ Separated Mixed Occupancy (302.3.3) - See below for area calculations
For each story, the area of the occupancy shall be such that the sum of the ratios of the actual floor area of each use divided by the allowable floor area for each use shall not exceed 1.

$$\frac{\text{Actual Area of Occupancy A}}{\text{Allowable Area of Occupancy A}} + \frac{\text{Actual Area of Occupancy B}}{\text{Allowable Area of Occupancy B}} \leq 1$$

$$\_\_\_\_ + \_\_\_\_ + \ldots\ldots = \leq 1.00$$

STORY NO.	DESCRIPTION AND USE	(A) BLDG AREA PER STORY (ACTUAL)	(B) TABLE 503[5] AREA	(C) AREA FOR OPEN SPACE INCREASE[1]	(D) AREA FOR SPRINKLER INCREASE[2]	(E) ALLOWABLE AREA OR UNLIMITED[3]	(F) MAXIMUM BUILDING AREA[4]
First	Storage - Business	35,144	17,500	13,125	52,500		83,125

[1] Open space area increases from Section 506.2 are computed thus:
a. Perimeter which fronts a public way or open space having 20 feet minimum width = (F)
b. Total Building Perimeter = (P)
c. Ratio (F/P) = (F/P)
d. W = Minimum width of public way = (W)
e. Percent of frontage increase $I_f = 100\ [\ F/P - 0.25\ ]\ \times\ W/30$ = (%)
[2] The sprinkler increase per Section 506.3 is as follows:
a. Multi-story building $I_s = 200$ percent
b. Single story building $I_s = 300$ percent
[3] Unlimited area applicable under conditions of Sections Group B, F, M, S, A-4 (507.1, 507.2, 507.3, 507.5); Group A motion picture (507.8); Malls (402.6); and H-2 aircraft paint hangers (507.6).
[4] Maximum Building Area = total number of stories in the building x E but not greater than 3 x E.
[5] The maximum area of parking garages must comply with 406.3.5. The maximum area of air traffic control towers must comply with 412.1.2.

ALLOWABLE HEIGHT

	ALLOWABLE (TABLE 503)	INCREASE FOR SPRINKLERS	SHOWN ON PLANS	CODE REFERENCE
Type of Construction	Type IIB		Type IIB	IBC-602.2
Building Height in Feet	Feet 55'	Feet = H + 20' =	28'	Table 503
Building Height in Stories	Stories 3	Stories + 1 =	Stories 1	Table 503

FIRE PROTECTION REQUIREMENTS

Life Safety Plan Sheet #, if Provided

BUILDING ELEMENT	FIRE SEPARATION DISTANCE (FEET)	RATING REQ'D	RATING PROVIDED (W/_____" REDUCTION)	DETAIL # AND SHEET #	DESIGN # FOR RATED ASSEMBLY	DESIGN # FOR RATED PENETRATION	DESIGN # FOR RATED JOINTS
Structural frame, including columns, girders, trusses	NA	NA					
Bearing walls	NA	NA					
Exterior							
North							
East							
West							
South							
Interior							
Nonbearing walls and partitions	NA	NA					
Exterior							
North							
East							
West							
South							
Interior							
Floor construction Including supporting beams and joists	NA	NA					
Roof construction Including supporting beams and joists							
Shafts - Exit	NA	NA					
Shafts - Other	NA	NA					
Corridor Separation	NA	NA					
Occupancy Separation	NA	NA					
Party/Fire Wall Separation	NA	NA					
Smoke Barrier Separation	NA	NA					
Tenant Separation	NA	NA					

* Indicate section number permitting reduction

LIFE SAFETY SYSTEM REQUIREMENTS

Emergency Lighting: ☐ No ☒ Yes
Exit Signs: ☐ No ☒ Yes
Fire Alarm: ☐ No ☒ Yes
Smoke Detection Systems: ☐ No ☒ Yes
Panic Hardware: ☒ No ☐ Yes

EXIT REQUIREMENTS

NUMBER AND ARRANGEMENT OF EXITS

FLOOR, ROOM OR SPACE DESIGNATION	MINIMUM[2] NUMBER OF EXITS REQUIRED	MINIMUM[2] NUMBER OF EXITS SHOWN ON PLANS	TRAVEL DISTANCE ALLOWABLE TRAVEL DISTANCE (TABLE 1004.2.4)	TRAVEL DISTANCE ACTUAL TRAVEL DISTANCE SHOWN ON PLANS	ARRANGEMENT MEANS OF EGRESS[1,3] (SECTION 1004.1) REQUIRED DISTANCE BETWEEN EXIT DOORS	ARRANGEMENT MEANS OF EGRESS[1,3] (SECTION 1004.1) ACTUAL DISTANCE SHOWN ON PLANS
MAINTENANCE ADDITION	1	2	250'	70'	100' COMMON PATH	70'
OFFICE ADDITION	1 (TABLE 1005.2.2 NOTE*D & 1004.2.1)	1	300'	98'	100' COMMON PATH 50' DEAD END	98' 16'

[1] Corridor dead ends (Section 1004.3.2.3)
[2] Single exits (Table 1005.2.2)
[3] Common Path of Travel (Section 1004.2.5)

EXIT WIDTH

USE GROUP OR SPACE DESCRIPTION	(a) AREA[1] sq. ft.	(b) AREA[1] PER OCCUPANT (TABLE 1003.2.2.2)	(c) EGRESS WIDTH PER OCCUPANT (TABLE 1003.2.3) STAIR	(c) EGRESS WIDTH PER OCCUPANT (TABLE 1003.2.3) LEVEL	EXIT WIDTH (in)[2,3,4,5,6] REQUIRED WIDTH (SECTION: 1003.2.3) (a÷b) x c STAIR	REQUIRED WIDTH LEVEL	ACTUAL WIDTH SHOWN ON PLANS STAIR	ACTUAL WIDTH SHOWN ON PLANS LEVEL
MAINTENANCE ADDITION	4,760	/200 = 24	NA	0.15	NA	3.6	NA	(2) 32" = 64"
OFFICE ADDITION	4,716	/100 = 48	NA	0.15	NA	7.2	NA	64"

[1] See Table 1003.2.2.2 to determine whether net or gross area is applicable. See definition "Area, Gross" and "Area, Net" (Section 1002)
[2] The sprinkler increase per Section 506.3 is as follows:
a. Multi-story building $I_s = 200$ percent
b. Single story building $I_s = 300$ percent
[3] Minimum stairway width (Section 1003.3.3); min. corridor width (Section 1004.3.2.2); min. door width (Section 1003.3.1)
[4] Minimum width of exit passageway (Section 1005.3.3)
[5] The loss of one means of egress shall not reduce the available capacity to less than 50 percent of the total required (Section 1003.2.3)
[6] Assembly occupancies (Section 1008)

STRUCTURAL DESIGN

DESIGN LOADS:

Importance Factors: Wind (I_W) Snow (I_S) Seismic (I_E)

REFER TO STRUCTURAL DRAWINGS

Live Loads: Roof psf
Mezzanine psf
Floor psf

Snow Load: psf

Wind Load: Basic Wind Speed mph (ASCE-7-98)
Exposure Category
Wind Base Shears (for MWFRS) Vx = Vy =

SEISMIC DESIGN CATEGORY A
Compliance with Section 1616.4 only? ☐ Yes ☐ No

SEISMIC DESIGN CATEGORY B, C, & D
Provide the following Seismic Design Parameters:
Seismic Use Group
Spectral Response Acceleration S_{MS} %g S_{M1} %g
Site Classification
Basic structural system (check one)
Bearing Wall Dual w/Special Moment Frame
Building Frame Dual w/Intermediate R/C or Special Steel
Moment Frame Inverted Pendulum
Seismic base shear V_X = V_Y =
Analysis Procedure Simplified Equivalent Lateral Force Modal
Architectural, Mechanical, Components anchored?

LATERAL DESIGN CONTROL: Earthquake Wind

SOIL BEARING CAPACITIES:
Field Test (provide copy of test report) psf
Presumptive Bearing capacity psf
Pile size, type, and capacity

PLUMBING FIXTURE REQUIREMENTS

OCCUPANCY	WATERCLOSETS MALE	WATERCLOSETS FEMALE	URINALS	LAVATORIES MALE	LAVATORIES FEMALE	SHOWERS/ TUBS	DRINKING FOUNTAINS REGULAR	DRINKING FOUNTAINS ACCESSIBLE
OFFICE	1	2	N/A	1	1	N/A		1

1. TWO MALE WATER CLOSETS ARE PROVIDED TO BALANCE TOILET ROOM SIZES.
2. PROVISIONS FOR DRINKING WATER WILL BE PROVIDED IN THE BREAK ROOMS.

ACCESSIBLE PARKING

LOT OR PARKING AREA	TOTAL # OF PARKING SPACES REQUIRED	TOTAL # OF PARKING SPACES PROVIDED	# OF ACCESSIBLE SPACES PROVIDED REGULAR WITH 5' ACCESS AISLE	# OF ACCESSIBLE SPACES PROVIDED VAN SPACES WITH 8' ACCESS AISLE	TOTAL # ACCESSIBLE PROVIDED
TOTAL					

SPECIAL APPROVALS

Special approval: (Local Jurisdiction, Department of Insurance, SBCCI, ICC, etc., describe below): **Town of Cary**

REFER TO SITE DRAWINGS

ENERGY SUMMARY

ENERGY REQUIREMENTS:
The following data shall be considered minimum and any special attribute required to meet the energy code shall also be provided. Each Designer shall furnish the required portions of the project information for the plan data sheet. If energy cost budget method, state the annual energy cost budget vs allowable annual energy cost budget.

THERMAL ENVELOPE

Method of Compliance:
☒ Prescriptive ☐ Performance ☐ Energy Cost Budget

Roof/ceiling Assembly (each assembly)
Description of assembly: **Single Ply Membrane on Rigid Insulation on Steel Deck**
U-Value of total assembly: **0.054**
R-Value of outside Surface Resistance: 0.33300
R-Value of Membrane: 0.15319
R-Value of insulation: **23**
R-Value of Deck: 0.00011
R-Value of Air Space: 0.91000
R-Value of Inside Surface Resistance: 0.68500
Skylights in each assembly: **NA**
U-Value of skylight
total square footage of skylights in each assembly

Exterior Walls (each assembly)
Description of assembly
U-Value of total assembly: **0.075**
R-Value of outside Surface Resistance: 0.33300
R-Value of Face Brick: 0.43290
R-Value of Air Space: 0.91000
R-Value of 8" CMU w/Foam Insulation: 11.0000
R-Value of Inside Surface Resistance: 0.68500
Openings (windows or doors with glazing)
U-Value of assembly: **0.350**
shading coefficient: **0.400**
projection factor: **NA**
low e required, if applicable
Door R-Values: 0.91000

Walls adjacent to unconditioned space (each assembly): **NA**
Description of assembly
U-Value of total assembly
R-Value of insulation
Openings (windows or doors with glazing)

Floors over unconditioned space (each assembly)
Description of assembly
U-Value of total assembly
R-Value of insulation

Floors slab on grade
Description of assembly
U-Value of total assembly
R-Value of insulation
Horizontal/vertical requirement
slab heated

ELECTRICAL SUMMARY

ELECTRICAL SYSTEM AND EQUIPMENT

Method of Compliance:
☐ Prescriptive ☐ Performance ☐ Energy Cost Budget

Lighting schedule
lamp type required in fixture
number of lamps in fixture
ballast type used in the fixture
number of ballasts in fixture
total wattage per fixture
total interior wattage specified vs allowed
total exterior wattage specified vs allowed

REFER TO ELECTRICAL DRAWINGS

Equipment schedules with motors (not used for mechanical systems)
motor horsepower
number of phases
minimum efficiency
motor type
# of poles

MECHANICAL SUMMARY

MECHANICAL SYSTEMS, SERVICE SYSTEMS AND EQUIPMENT

Method of Compliance
☐ Prescriptive ☐ Energy Cost Budget

Thermal Zone
winter dry bulb
summer dry bulb

Interior design conditions
winter dry bulb
summer dry bulb
relative humidity

REFER TO MECHANICAL DRAWINGS

Building heating load

Building cooling load

Mechanical Spacing Conditioning System
Unitary
description of unit
heating efficiency
cooling efficiency
heat output of unit
cooling output of unit
Boiler
total boiler output. If oversized, state reason.
Chiller
total chiller capacity. If oversized, state reason.

List equipment efficiencies

Equipment schedules with motors (mechanical systems)
motor horsepower
number of phases
minimum efficiency
motor type
# of poles

DEMOLITION PLAN LEGEND

EXISTING WALLS TO REMAIN.	EXISTING WALLS TO BE REMOVED
EXISTING DOOR AND FRAME TO REMAIN.	EXISTING DOOR, FRAME & HARDWARE TO BE REMOVED (SALVAGE DOORS & HARDWARE TO BE REUSED)
# DEMOLITION NOTE	

REFERENCED DEMOLITION NOTES

C1 REMOVE EXISTING CEILING AS REQUIRED FOR PARTITION AND ABOVE-CEILING WORKS. REFER TO FIRE PROTECTION, PLUMBING, MECHANICAL AND ELECTRICAL DRAWINGS FOR APPLICABLE ABOVE-CEILING WORK. REFER TO CEILING PLAN, A2.1 & ALLOWANCE SECTION FOR LOCATION & EXTENT OF NEW CEILING SYSTEM & THE EXISTING CEILING TO BE RE-USED (SALVAGE AND REUSE CEILING TILES. PATCH CEILING GRID AS REQUIRED. NEW GRID AND TILES TO MATCH EXISTING.)

D1 REMOVE EXISTING DOOR, FRAME & HARDWARE. SALVAGE FOR REUSE IN THE NEW CONSTRUCTION. REFINISH AS REQUIRED. REFER TO FLOOR PLAN FOR NEW LOCATIONS.

F1 TYPICAL NOTE: SAW CUT OR CORE DRILL FLOORS AND ROOF AS REQUIRED FOR PLUMBING & ELECTRICAL PENETRATIONS. COORDINATE DEMOLITION ACTIVITIES WITH ALL TRADES AND WITH THE BUILDING OWNER (AND OTHER TENANT SPACES), INCLUDING REQUIRED DEMOLITION OF WALLS, CEILING, MECHANICAL, ELECTRICAL AND PLUMBING ITEMS RELATED TO THIS PROJECT. SCHEDULE BUILDING UTILITIES SHUT DOWN WITH THE BUILDING OWNER TO MINIMIZE INTERRUPTIONS TO OTHER TENANTS (DURING OR AFTER WORK HOURS). VERIFY FINAL LOCATIONS WITH ARCHITECT.

F2 REMOVE EXISTING FLOOR AND WALL FINISHES, BASE, CASEWORK, CHAIR RAILS AND TRIMS AS REQUIRED FOR NEW CONSTRUCTION. REFER TO FLOOR PLAN FOR EXTENT OF WORK AREA. REFER TO FINISH SCHEDULE FOR NEW FINISHES.

M1 REMOVE EXISTING MILLWORK, CABINETS AND WINDOW. MAINTAIN MAILBOXES AND SELECTIVE CASEWORK FOR RE-USE. PATCH WALLS AND FLOORS TO RECEIVE NEW FINISHES MATCHING ADJACENT SURFACES. PAINT WALL ONBOTH SIDES. REFER TO FLOOR PLAN & FINISH SCHEDULE FOR NEW WORK

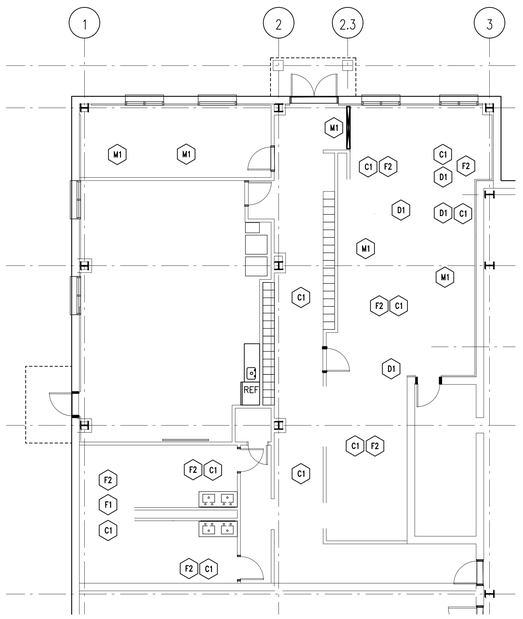

1 / DA1.1 PARTIAL DEMOLITION PLAN - EXISTING OFFICE
REFER TO A1.1 FOR OTHER ARCHITECTURAL DEMILITION NOTES
1/8" = 1'-0"
0 4 8 16 24
GRAPHIC SCALE IN FEET 1/8" = 1'-0"

TTA

ADDITIONS TO MAINTENANCE FACILITY

5201 NELSON ROAD (MAINTENANCE BLDG)
5210 NELSON ROAD (VACANT LOT)
CARY, NORTH CAROLINA

COMPLETE FACILITIES SOLUTIONS

MOSER MAYER PHOENIX ASSOCIATES, PA
328 E. Market Street
Suite 200
Greensboro, N.C. 27401
Telephone 336-373-9800
Fax 336-373-0077

KENNETH CHARLES MAYER REGISTERED ARCHITECT CERT. NO. 4305 NORTH CAROLINA GREENSBORO, N.C.
MOSER MAYER PHOENIX ASSOCIATES, P.A. REGISTERED ARCHITECTURAL FIRM CERT. NO. 361 NORTH CAROLINA GREENSBORO, N.C.

THIS DRAWING IS THE PROPERTY OF MOSER MAYER PHOENIX ASSOCIATES, P.A. AND IS NOT TO BE COPIED OR REPRODUCED IN PART OR WHOLE WITHOUT PERMISSION.

MULKEY ENGINEERS & CONSULTANTS
PO Box 33127
RALEIGH, N.C. 27636
(919) 851-1912
(919) 851-1918 (FAX)
WWW.MULKEYINC.COM

RECORD DRAWING DISCLAIMER
TO THE BEST OF OUR KNOWLEDGE, THESE DRAWINGS HAVE BEEN REVISED TO REFLECT CHANGES MADE DURING THE CONSTRUCTION PROCESS, BASED UPON THE MARKED-UP DRAWINGS AND OTHER DATA FURNISHED TO THE ARCHITECT BY THE CONTRACTOR OR CONTRACTORS. THE ARCHITECT DOES NOT ASSURE THE ACCURACY OF THAT INFORMATION OR TAKE RESPONSIBILITY FOR ANY ERROR OR OMISSION INCORPORATED INTO THE DRAWINGS AS A RESULT. THE OWNER IS ADVISED TO OBTAIN INDEPENDENT VERIFICATION PRIOR TO USING THE INFORMATION CONTAINED HEREIN.

REVISIONS

NO.	DATE	DESCRIPTION
	01-28-08	RECORD DRAWINGS

DATE	APRIL 28, 2006
PROJECT NUMBER	05111.00 (05156.00)
SCALE	
DRAWN BY	

APPENDIX B CODE SUMMARY
DEMOLITION PLAN

G1.1

GENERAL NOTES:

1. NO CHANGES TO ANY ASPECT OF THIS PLAN, INCLUDING BUT NOT LIMITED TO, LANDSCAPING,GRADING, BUILDING ELEVATIONS (ESPECIALLY COLORS), LIGHTING, OR UTILITIES WILL BE MADE WITHOUT THE APPROVAL OF THE DEVELOPMENT REVIEW GROUP OF THE DEPARTMENT OF PLANNING.
2. THE SITE SHALL BE STABILIZED AND SEEDED PRIOR TO THE ISSUANCE OF A CERTIFICATE OF OCCUPANCY.
3. ALL HVAC SYSTEMS WILL BE SCREENED FROM OFF SITE VIEWS.
4. ALL DUMPSTER AND CARDBOARD RECYCLING LOCATIONS WILL BE SCREENED FROM OFF SITE VIEWS.
5. WHERE EXISTING VEGETATION FAILS TO FUNCTION ADEQUATELY AS REQUIRED, (I.E. BUFFER TYPE A, B, C, 30' STREETSCAPE BUFFER. THE CARY SITE INSPECTOR RESERVES THE RIGHT TO REQUIRE SUPPLEMENTAL PLANTINGS IN ADDITION TO THOSE SHOWN ON THE PLANTING PLAN BASED ON ACTUAL FIELD CONDITIONS.
6. ALL EXTERIOR SITE LIGHTING WILL BE DESIGNED TO PREVENT OFF SITE GLARE.
7. THE SIZE OF THE PLANTING AREA AND SIZE OF PLANT MATERIAL AT MATURITY SHALL ALLOW FOR A 2.5' BUMPER OVERHANG FROM THE BACK OF CURB.
8. NO TREE SHALL BE LOCATED WITHIN A ROADWAY RIGHT-OF-WAY OR WITHIN 5' OF A SIDEWALK.
9. NO TREE SHALL BE LOCATED WITHIN 10' OF A LIGHTING LOCATION.
10. ALL TREE PROTECTION FENCING SHALL BE MAINTAINED UNTIL ALL SITE WORK IS COMPLETED. THE FENCING SHALL BE REMOVED PRIOR TO THE FINAL SITE INSPECTION FOR THE CERITFICATE OF OCCUPANCY (CO).
11. ALL ABOVE GROUND UTILITY EQUIPMENT AND FACILITIES ASSOCIATED WITH ON SITE ELECTRIC, CABLE, TELEPHONE, GAS OR OTHERSIMILAR UTILITY SHALL BE IN THE SIDE OR REAR YARD & SHALL BE SCREENED, TO THE EXTENT POSSIBLE, WITH EVERGREEN PLANTINGS. PLANTINGS SHALL ALLOW FOR A MINIMUM OF A 5' CLEARANCE AROUND THE STRUCTURE TO ALLOW FOR ACCESS. ADDITIONALLY, ANY SIDE OF THE STRUCTURE HAVING A DOOR OR LOCK, THE PLANTINGS SHALL ALLOW FOR A 10' CLEARANCE. THE AMOUNT OF CLEARANCE SHALL ACCOUNT FOR THE SIZE OF THE PLANT MATERIAL AT MATURITY.
12. ALL VEHICULAR USE AREAS (DRIVES AND PARKING AREAS) SHALL BE SCREENED FROM OFFSITE VIEWS.
13. ALL SITE CONSTRUCTION MUST BE PERFORMED IN ACCORDANCE WITH CURRENT TOWN OF CARY STANDARD SPECIFICATIONS AND DETAILS AND ALL ROADWAY CONSTRUCTION WITH CURRENT NCDOT STANDARDS AND SPECIFICATIONS.
14. ALL WORK MUST COMPLY WITH NC STATE BUILDING AND HANDICAPPED ACCESSIBILITY CODE VOL 1C.
15. ANY RETAINING WALLS ON THE SITE OVER 5' HIGH REQUIRE A BUILDING PERMIT.
16. ALL CONSTRUCTION MUST BE PERFORMED IN ACCORDANCE WITH CURRENT TOWN OF CARY STANDARD SPECIFICATIONS AND DETAILS.
17. ALL ADJACENT STREETS IN THE VICINITY OF THIS PROJECT SHALL BE KEPT CLEAN AT ALL TIMES WITH RESPECT TO CONSTRUCTION TRAFFIC. IF THEY ARE NOT, A WASH STATION WILL BE REQUIRED.
18. THE TREE PROTECTION FENCING SHALL BE INSTALLED AND INSPECTED PRIOR TO THE ISSUANCE OF A GRADING PERMIT FOR THIS PROJECT.
19. THIS PROJECT DRAINS TO THE xxxxxxx WATERSHED.

SITE DATA

PROPERTY OWNER.... RESEARCH TRIANGLE REGIONAL PUBLIC TRANSPORTATION AUTHORITY
PROPERTY ADDRESS....5201 NELSON ROAD (MAINT. SITE), 5210 NELSON ROAD (VACANT LOT)
CARY PROJECT # 05-SP-XXX
PIN #....0245586 (MAINTENANCE SITE), 0092222 (VACANT LOT)
ZONING....ORD (BOTH PARCELS)

5201 NELSON ROAD (MAINT. SITE)

PRE-DEVELOPMENT:		POST-DEVELOPMENT:	
TOTAL ACRES	9.02 AC	TOTAL ACRES	9.02 AC
IMPERVIOUS ACRES	4.30 AC	IMPERVIOUS ACRES	5.08 AC
PERVIOUS ACRES	4.72 AC	PERVIOUS ACRES	3.94 AC
%IMPERVIOUS	47.7%	%IMPERVIOUS	56.3%

5210 NELSON ROAD (VACANT LOT)

PRE-DEVELOPMENT:		POST-DEVELOPMENT:	
TOTAL ACRES	4.81 AC	TOTAL ACRES	4.81 AC
IMPERVIOUS ACRES	0.00 AC	IMPERVIOUS ACRES	1.86 AC
PERVIOUS ACRES	4.81 AC	PERVIOUS ACRES	2.95 AC
%IMPERVIOUS	0.00%	%IMPERVIOUS	38.6%

PARKING (MAIN COMPLEX)

EMPLOYEE:	
EXISTING TO REMAIN:	57
PROPOSED SPACES:	2
TOTAL:	59
HANDICAP SPACES:	3
BUS/VAN:	
BUS PARKING:	52
VAN PARKING:	20
TOTAL BUS/VAN:	72

PARKING (OVERFLOW LOT)

EMPLOYEE:	126
PHASE 1 PROPOSED SPACES:	173
PHASE 2 PROPOSED SPACES:	
TOTAL:	47
VAN:	
PHASE 1 PROPOSED SPACES:	30
PHASE 2 PROPOSED SPACES:	0
TOTAL:	30

NOTES

These notes set forth here shall apply to each and every sheet.

All site construction shall be in accordance with Town of Cary standards and specifications details and all road construction shall be per NCDOT Standards and Specifications details.

The Engineer does not guarantee that all existing facilities such as pipelines, electrical lines, conduit, telephone cable, service connections, or other facilities are shown on the plans. It shall be the Contractor's responsiblity to have all utilities located by their respective owners, field mark the utility locations, and protect all such existing facilities prior to beginning construction. The Contractor is fully responsible for notifying all utility owners in accordance with NC General Statute — Chapter 87, Article 8, The Underground Damage Prevention Act.

APPROVED
TOWN OF CARY

Approved by __________ Date __________
Planning __________ Date __________
Engineering __________ Date __________

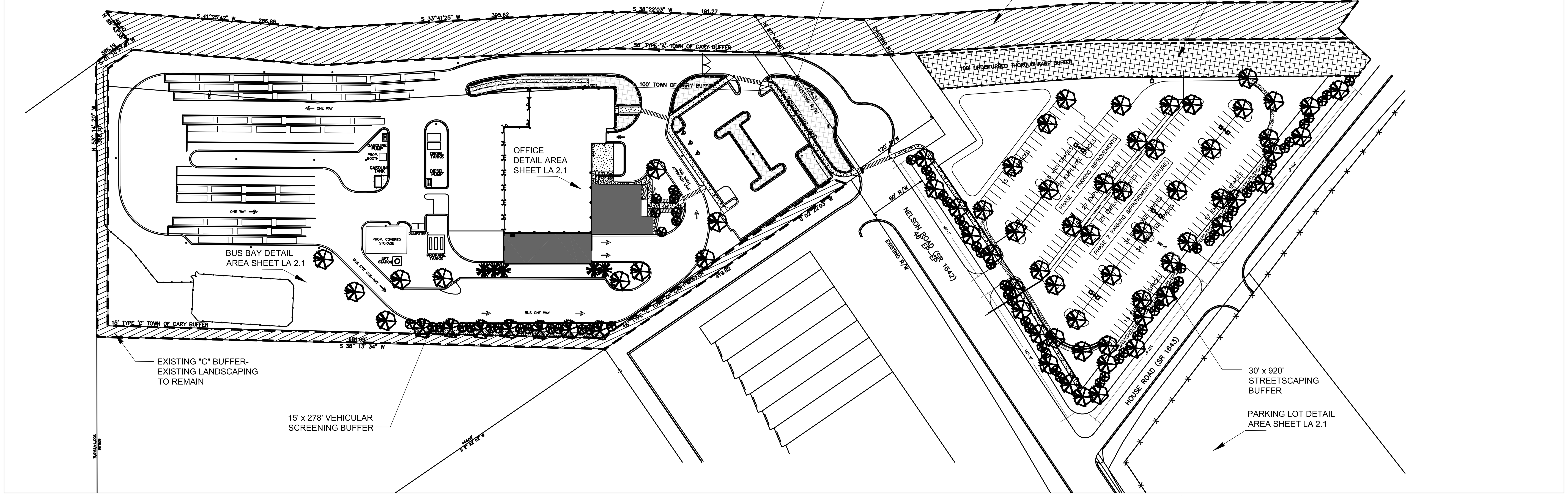

1 LA1.1 OVERALL LANDSCAPING PLAN 1"=60'

LANDSCAPE MAINTENANCE PLAN

THE OWNERS OF THE PROPERTY AND THEIR AGENTS, HEIRS, OR ASSIGNS SHALL BE RESPONSIBLE FOR THE INSTALLATION, PRESERVATION, AND MAINTENANCE OF ALL PLANTING AND PHYSICAL FEATURES SHOWN ON THIS PLAN. THE OWNERS SHALL BE RESPONSIBLE FOR MAINTENANCE OF THE VEGETATION, INCLUDING BUT NOT LIMITED TO THE FOLLOWING:

1. FERTILIZATION:
LAWN - AS RECOMMENDED BY AGRONOMIC CHEMICAL ANALYSIS. APPLY IN EARLY SPRING, LATE SPRING AND EARLY FALL.
TREES AND SHRUBS - APPLY GENERAL PURPOSE (10-10-10) IN EARLY SPRING.
2. PRUNING TO MAINTAIN NATURAL SHAPE:
LIMITED TO REMOVAL OF DEAD WOOD OR FOR SIGHT DISTANCES/SAFETY REASONS ONLY.
3. PEST CONTROL:
APPLY PRE-EMERGENT WEED CONTROL FOR LAWNS AND SHRUB BEDS IN FEBRUARY. CHEMICAL TREATMENT FOR INSECT INFESTATION AND DISEASE ONLY IF WARRENTED.
4. MULCHING:
MAINTAIN MULCH IN PLANTING BEDS TO A DEPTH OF 2"-3". REPLENISH AS NECESSARY.
5. MOWING:
FESCUE LAWNS SHALL BE CUT TO A HEIGHT OF 3". MOW AS OFTEN AS NECESSARY TO PREVENT CUTTING MORE THAN 1" OFF THE TOP - AVERAGE OF 30 TIMES PER YEAR.
6. PROTECTION OF THE ROOT ZONE FROM EQUIPMENT. CONSTRUCTION AND RELATED MATERIALS, ETC.:
AVOID EXCESS INTRUSION INTO THE ROOT ZONE AREA OF ESTABLISHED PLANTINGS.
7. WATERING:
PROVIDE APPROXIMATELY 1" OF EQUALIVENT RAINFALL PER WEEK TO ALL GRASS AREAS DURING GROWING SEASON.. WATER TREES AND SHRUBS DURING FIRST YEAR - AS NECESSARY THEREAFTER.
8. OTHER CONTINUING MAINTENANCE OPERATIONS:
FAILURE TO MAINTAIN ALL PLANTINGS IN ACCORDANCE WITH THIS PLAN MAY CONSTITUTE A VIOLATION OF THE UNIFIED DEVELOPMENT ORDINANCE AND MAY RESULT IN FINES.

2 LA1.1 LANDSCAPE MAINTENANCE PLAN NTS

TREES:				
NO.	COMMON NAME	BOTANICAL NAME	SIZE	REMARKS
40	RED MAPLE	ACER RUBRUM "RED SUNSET"	2" CALIPER / 8' TALL	
67	CRAPEMYRTLE	LAGERSTROEMIA INDICA	8'- 10' TALL	WATERMELLON RED
33	KENTUCKY COFFEETREE	GYMNOCLADUS DIOICUS	2" CALIPER / 8' TALL	
5	SAVANNAH HOLLY	ILEX OPACA "SAVANNAH"	7'- 8' TALL	FULL
SHRUBS:				
330	DWARF PITTOSPORUM	PITTOSPORUM TOBIRA "NANA"	3 GAL. CONT. / 18" TALL	
96	DWARF YAUPON HOLLY	ILEX VOMITORIA "NANA"	1 GAL. CONTAINER	
50	DWARF BURFORD HOLLY	ILEX CORNUTA "BURFORDI NANA"	3 GAL. CONT. / 18" TALL	
GROUNDCOVERS:				
120	PERIWINKLE	VINCA MINOR	4" POTS	PLANT 30" O.C.

3 LA1.1 PLANT LIST NTS

PLANTING DETAILS
Tree Planting

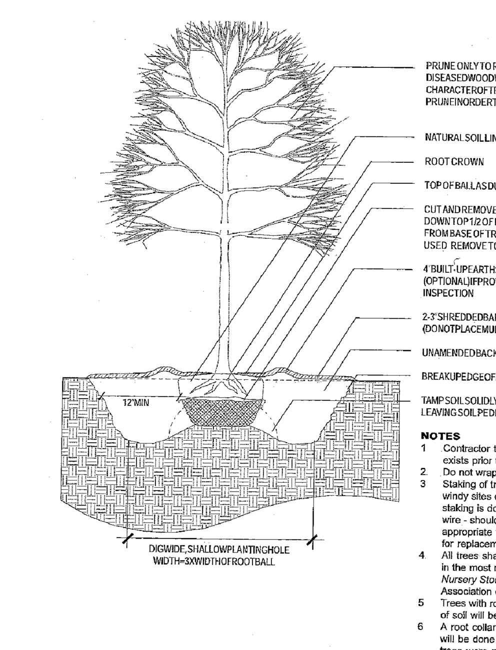

NOTES
1. Contractor to verify that adequate drainage exists prior to planting
2. Do not wrap trunk of tree
3. Staking of trees is not recommended, except on windy sites or for large evergreen trees. If staking is done, flexible straps - not hose and wire - should be used and must be removed at appropriate time. Property Owner is responsible for replacement of destroyed or damaged trees
4. All trees shall conform to the standards set forth in the most recent *American Standards for Nursery Stock* published by the American Association of Nurserymen (A.A.N.)
5. Trees with root flare covered by more than 1.5" of soil will be rejected prior to installation.
6. A root collar excavation for all trees specified will be done by the Town Arborist to ensure that trees were not planted/grown too deeply at the source (nursery). Landscape contractor shall have supplier mark ground level line above rootball. If Town Arborist determines that there is excessive soil over root crown these trees will be rejected

4 LA1.1 TREE PLANTING DETAIL NTS

PLANTING DETAILS
Shrub, Groundcover, and Perennial Planting

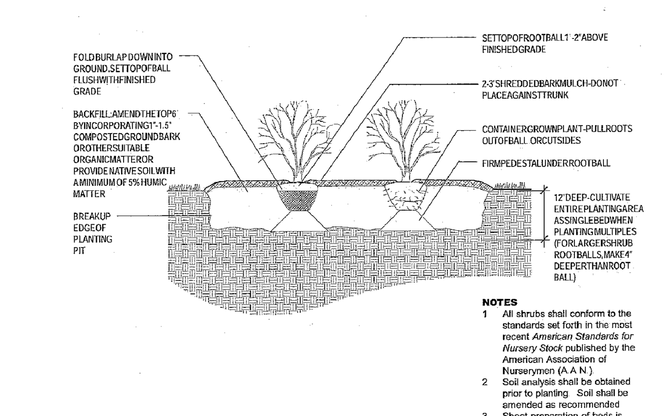

NOTES
1. All shrubs shall conform to the standards set forth in the most recent *American Standards for Nursery Stock* published by the American Association of Nurserymen (A.A.N.)
2. Soil analysis shall be obtained prior to planting. Soil shall be amended as recommended
3. Sheet preparation of beds is highly preferred to individually dug holes.

5 LA1.1 SHRUB & GROUND COVER PLANTING DETAIL NTS

TTA

ADDITIONS TO MAINTENANCE FACILITY

5201 NELSON ROAD (MAINTENANCE BLDG)
5210 NELSON ROAD (VACANT LOT)
CARY, NORTH CAROLINA

COMPLETE FACILITIES SOLUTIONS
MOSER MAYER PHOENIX ASSOCIATES, PA
328 E. Market Street
Suite 200
Greensboro, N.C. 27401
Telephone 336-373-9800
Fax 336-373-0077

KENNETH CHARLES GAINER, JR. REGISTERED LANDSCAPE ARCHITECT SEAL 441 NORTH CAROLINA
MOSER MAYER PHOENIX ASSOCIATES P.A. REGISTERED ARCHITECTURAL CORPORATION CERT. NO. 361 NORTH CAROLINA GREENSBORO N.C.

THIS DRAWING IS THE PROPERTY OF MOSER MAYER PHOENIX ASSOCIATES, P.A. AND IS NOT TO BE COPIED OR REPRODUCED IN PART OR WHOLE WITHOUT PERMISSION.

MULKEY ENGINEERS & CONSULTANTS
PO Box 33127
Raleigh, N.C. 27636
(919) 851-1912
(919) 851-1918 (FAX)
WWW.MULKEYINC.COM

RECORD DRAWING DISCLAIMER
TO THE BEST OF OUR KNOWLEDGE, THESE DRAWINGS HAVE BEEN REVISED TO REFLECT CHANGES MADE DURING THE CONSTRUCTION PROCESS, BASED UPON THE MARKED-UP DRAWINGS AND OTHER DATA FURNISHED TO THE ARCHITECT BY THE CONTRACTOR OR CONTRACTORS. THE ARCHITECT DOES NOT ASSURE THE ACCURACY OF THAT INFORMATION OR TAKE RESPONSIBILITY FOR ANY ERROR OR OMISSION INCORPORATED INTO THE DRAWINGS AS A RESULT. THE OWNER IS ADVISED TO OBTAIN INDEPENDENT VERIFICATION PRIOR TO USING THE INFORMATION CONTAINED HEREIN.

REVISIONS

NO.	DATE	DESCRIPTION
1	[illegible]	RECORD DRAWINGS / TOC 1st REVIEW COMMENTS
2	9-22-05	TOC 2nd REVIEW COMMENTS
3	1-13-06	BUILDING ENTRANCE MODIFICATIONS

DATE	APRIL 28, 2006
PROJECT NUMBER	05111.00 (05156.00)
SCALE	AS NOTED
DRAWN BY	RJG

OVERALL LANDSCAPING PLAN

LA1.1

1 LA2.1 PARKING LOT DETAIL PLAN
1"=40'

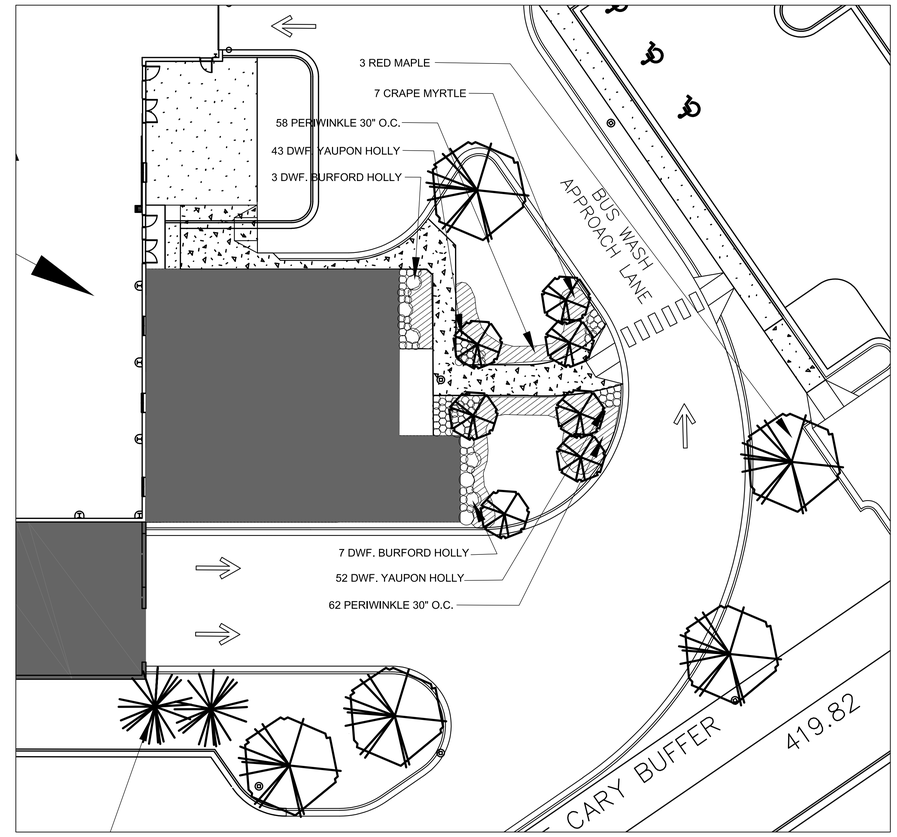

2 LA2.1 OFFICE AREA DETAIL PLAN
1/16"=1'-0"

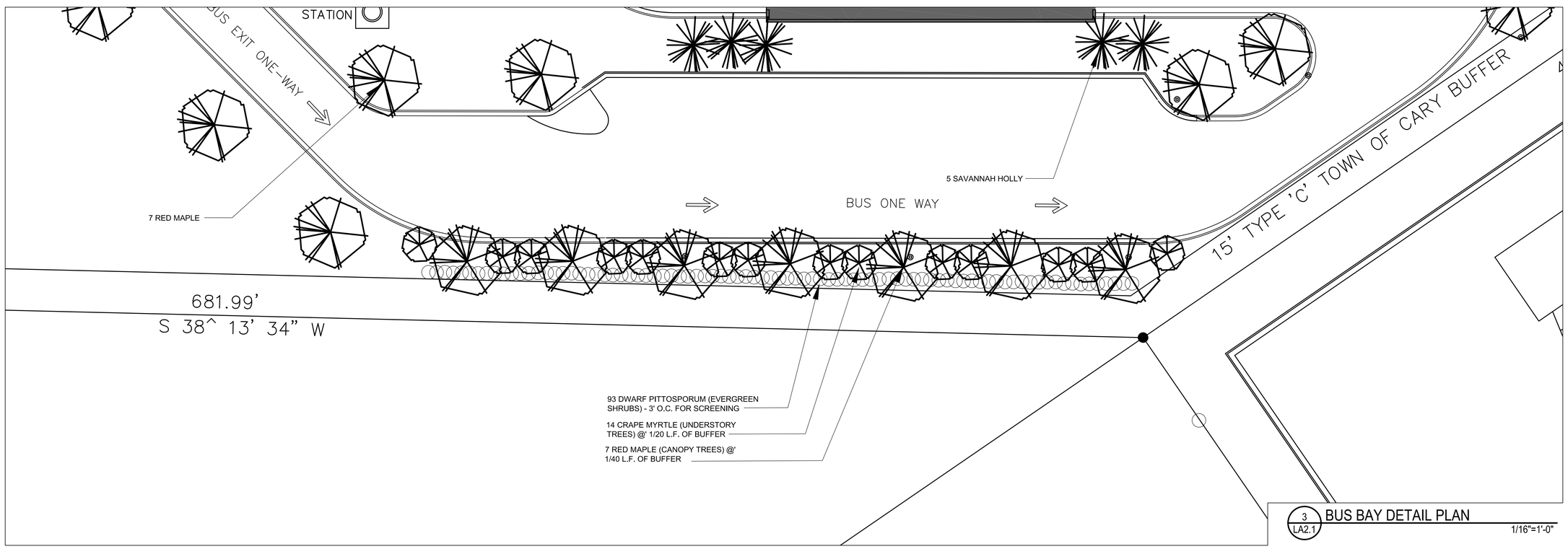

3 LA2.1 BUS BAY DETAIL PLAN
1/16"=1'-0"

TTA

ADDITIONS TO MAINTENANCE FACILITY

5201 NELSON ROAD (MAINTENANCE BLDG)
5210 NELSON ROAD (VACANT LOT)
CARY, NORTH CAROLINA

COMPLETE FACILITIES SOLUTIONS

MOSER MAYER PHOENIX ASSOCIATES, PA
328 E. Market Street
Suite 200
Greensboro, N.C. 27401
Telephone 336-373-9800
Fax 336-373-0077

CERT. NO. 361

THIS DRAWING IS THE PROPERTY OF MOSER MAYER PHOENIX ASSOCIATES, P.A. AND IS NOT TO BE COPIED OR REPRODUCED IN PART OR WHOLE WITHOUT PERMISSION.

MULKEY ENGINEERS & CONSULTANTS
PO Box 33127
Raleigh, NC 27636
(919) 851-1912
(919) 851-1918 (FAX)
WWW.MULKEYINC.COM

RECORD DRAWING DISCLAIMER

TO THE BEST OF OUR KNOWLEDGE, THESE DRAWINGS HAVE BEEN REVISED TO REFLECT CHANGES MADE DURING THE CONSTRUCTION PROCESS, BASED UPON THE MARKED-UP DRAWINGS AND OTHER DATA FURNISHED TO THE ARCHITECT BY THE CONTRACTOR OR CONTRACTORS. THE ARCHITECT DOES NOT ASSURE THE ACCURACY OF THAT INFORMATION OR TAKE RESPONSIBILITY FOR ANY ERROR OR OMISSION INCORPORATED INTO THE DRAWINGS AS A RESULT. THE OWNER IS ADVISED TO OBTAIN INDEPENDENT VERIFICATION PRIOR TO USING THE INFORMATION CONTAINED HEREIN.

REVISIONS

NO.	DATE	DESCRIPTION
1	8-22-2005	TOC 1st REVIEW COMMENTS
2	9-22-05	TOC 2nd REVIEW COMMENTS
3	1-13-06	BUILDING ENTRANCE MODIFICATIONS

DATE	APRIL 28, 2006
PROJECT NUMBER	05111.00 (05156.00)
SCALE	AS NOTED
DRAWN BY	RJG

LANDSCAPING DETAIL AREAS

LA2.1

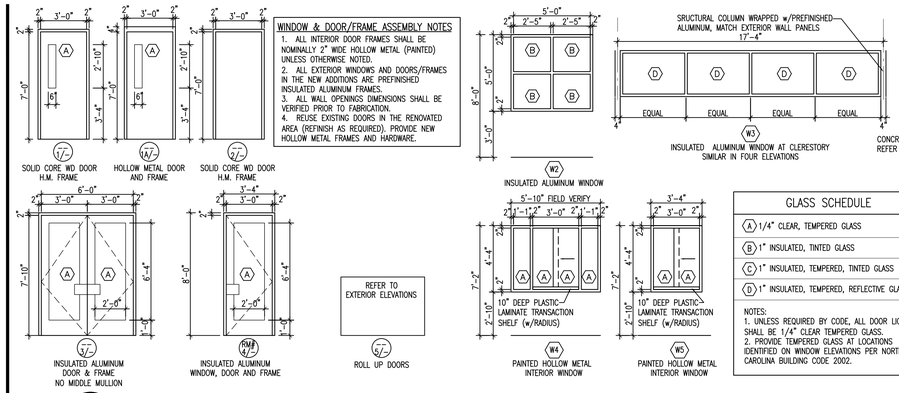

WINDOW & DOOR/FRAME ASSEMBLY NOTES

1. ALL INTERIOR DOOR FRAMES SHALL BE NOMINALLY 2" WIDE HOLLOW METAL (PAINTED) UNLESS OTHERWISE NOTED.
2. ALL EXTERIOR WINDOWS AND DOORS/FRAMES IN THE NEW ADDITIONS ARE PREFINISHED INSULATED ALUMINUM FRAMES.
3. ALL WALL OPENINGS DIMENSIONS SHALL BE VERIFIED PRIOR TO FABRICATION.
4. REUSE EXISTING DOORS IN THE RENOVATED AREA (REFINISH AS REQUIRED). PROVIDE NEW HOLLOW METAL FRAMES AND HARDWARE.

GLASS SCHEDULE

A	1/4" CLEAR, TEMPERED GLASS
B	1" INSULATED, TINTED GLASS
C	1" INSULATED, TEMPERED, TINTED GLASS
D	1" INSULATED, TEMPERED, REFLECTIVE GLASS

NOTES:
1. UNLESS REQUIRED BY CODE, ALL DOOR LIGHTS SHALL BE 1/4" CLEAR TEMPERED GLASS.
2. PROVIDE TEMPERED GLASS AT LOCATIONS IDENTIFIED ON WINDOW ELEVATIONS PER NORTH CAROLINA BUILDING CODE 2002.

2 / A1.1 DOOR & WINDOW ELEVATIONS

1/4" = 1'-0"

INTERIOR PARTITION AND EXTERIOR WALLS LEGEND

EXISTING INTERIOR PARTITIONS & EXTERIOR WALLS	
NEW INTERIOR STUD PARTITIONS REFER TO PARTITION TYPE FOR HEIGHTS	
NEW EXTERIOR UTILITY BRICK WALL (1X NOMINAL)	
NEW EXTERIOR CONCRETE MASONRY UNIT WITH BRICK VENEER WALL (1'-2" THICK). REFER TO FINISH SCHEDULE: USE COLOR GROUND FACE CMU WHERE EXPOSED, STANDARD CMU IN UTILITY & CONCEALED AREAS (ABOVE CEILING)	

W# WINDOW/FRAME ASSEMBLY TYPE — # ROOM # / DOOR/FRAME ELEVATION # – HARDWARE #

GLASS TYPE — #AP REFER TO APPENDIX IN THE PROJECT MANUAL FOR EXTENT OF WORK

PARTITION SCHEDULE AND NOTES

TYPICAL PARTITION:

TYPICAL INTERIOR DRYWALL PARTITION – UNLESS OTHERWISE NOTED, ALL INTERIOR PARTITIONS SHALL BE 3-5/8" METAL STUDS @ 16" O.C. WITH ONE LAYER 5/8" GWB EACH SIDE. TERMINATE AT STRUCTURE. USE DEFLECTION TRACKS AT TERMINATION ABOVE.

PARTITION SCHEDULE:

P3.1 – 3-5/8" METAL STUDS @ 16" O.C. WITH ONE LAYER 5/8" GWB ON EACH SIDE. UNLESS OTHERWISE NOTED TERMINATE AT 4" ABOVE CEILING. REFER TO FINISH SCHEDULE FOR CEILING HEIGHTS.

P3.2 – 3-5/8" METAL STUD @ 16" O.C. WITH 5/8" GWB ON ONE SIDE. TERMINATE AT STRUCTURE. USE DEFLECTION TRACKS AT TERMINATION ABOVE.

P3.3 – TWO ROWS OF 3-5/8" METAL STUDS @ 16" O.C. WITH ONE LAYER OF 5/8" GWB ON FINISHED SIDE. SEE PLANS FOR SPACING. TERMINATE ONE SIDE AT 4" ABOVE FINISHED CEILING HT & TERMINATE OTHER SIDE AT STRUCTURE ABOVE

P3.4 – 3-5/8" METAL STUD @ 16" O.C. WITH 5/8" GWB ON EACH SIDE. TERMINATE AT 8'-2" ABOVE FLOOR FINISH. CAP w/2x FINISH GRADE STAINED WOOD TRIM. PROVIDE 3" DIAM. STANDARD PIPE, 48" HIGH @ 48" o.c. PROVIDE THICKENED SLAB AT PIPES AS SHOWN ON 2/S1.2. ATTACH METAL STUD TO PIPE w/#10 TEK SCREWS AT 12" o.c. VERTICALLY

P3.5 – SYSTEM PARTITION BY OWNER. CONTRACTOR TO PROVIDE ELECTRICAL & DATA AS NOTED ON THE ELECTRICAL DRAWINGS. CONTRACTOR TO COORDINATE WITH THE PARTITION SUPPLIER FOR PROPER CONNECTIONS AND TYPES

EXTERIOR WALLS: REFER TO WALL SECTIONS FOR EXTERIOR WALL CONSTRUCTION.

PARTITION NOTES:

1. PROVIDE FRAMED OPENING @ ALL SUPPLY AND RETURN AIR PARTITION PENETRATIONS. SEE MECHANICAL DRAWINGS FOR SIZE AND LOCATIONS OF OPENINGS.
2. PROVIDE ACOUSTICAL BATT INSULATION BETWEEN STUDS FOR ALL DRYWALL PARTITIONS. WHERE INSULATION IS EXPOSED IN PLENUM, PROVIDE FOIL-BACKED INSULATION BATTS.
3. PROVIDE MOISTURE RESISTANT HI-ABUSE GYPSUM WALLBOARD FOR ALL PARTITIONS IN ALL TOILET ROOMS AND JANITOR CLOSETS.
4. PROVIDE FIRE TREATED WOOD BLOCKING BETWEEN ALL METAL STUDS TO REINFORCE GWB AT THE FOLLOWING LOCATIONS:
   A. BEHIND ALL DOORS RECEIVING WALL MOUNTED DOOR STOPS (INDICATED AS SWINGING AGAINST ADJACENT WALLS).
   B. ALONG PARTITIONS SCHEDULED TO RECEIVE WALL HUNG CABINETS, EQUIPMENT, SHELVING, LOCKERS AND TOILET ACCESSORIES.
5. PROVIDE DOUBLE METAL STUDS IN ALL DRYWALL PARTITIONS AT DOOR HEAD/JAMB CONDITIONS AND CORNER LOCATIONS. ALL PARTITIONS TO BE BRACED TO THE STRUCTURE AT 4'-0" O.C.
6. PROVIDE CONTROL JOINTS EQUAL TO USG No. 093 A MINIMUM OF 32 LINEAR FEET APART IN ALL DRYWALL PARTITIONS EXCEEDING 64 LINEAR FEET.
7. PROVIDE SOLID TOP TRACK AT ALL PARTITIONS WHICH STOP BETWEEN CEILING AND STRUCTURE ABOVE AS A FIREBLOCK. FIRE CAULK ALL PENETRATIONS. GWB SHALL TERMINATE AT TOP TRACK.
8. PROVIDE 3/4" TREATED PLYWOOD ON ALL WALLS INSIDE DATA AND ELECTRICAL ROOMS, AND AS REQUIRED BY ELECTICAL DRAWINGS.
9. PROVIDE PROPRIETARY DEFLECTION TRACKS AS TOP RUNNER IN STUD WALLS EXTENDING TO DECK ABOVE TO PREVENT CRACKING OF GYPSUM BOARD RESULTING FROM DEFLECTION OF STRUCTURAL ABOVE.
10. SEAL ALL PENETRATIONS AND JOINTS IN WALLS EXTENDING TO DECK ABOVE TO MAINTAIN SOUND ATTENUATION BETWEEN ROOMS.
11. ADD 48" WIDE FOIL FACED SOUND ATTENUATION BATT ABOVE CEILING AT WALLS/PARTITIONS THAT DO NOT EXTEND TO DECK ABOVE. MAINTAIN 24" FROM WALL CENTERLINE TO EDGE OF BATT ON EACH SIDE.
12. CAP TOP OF ALL CAVITY WALLS THAT DO NOT EXTEND TO DECK ABOVE (USE TYPE X GYPSUM BOARD AND SEAL JOINTS).

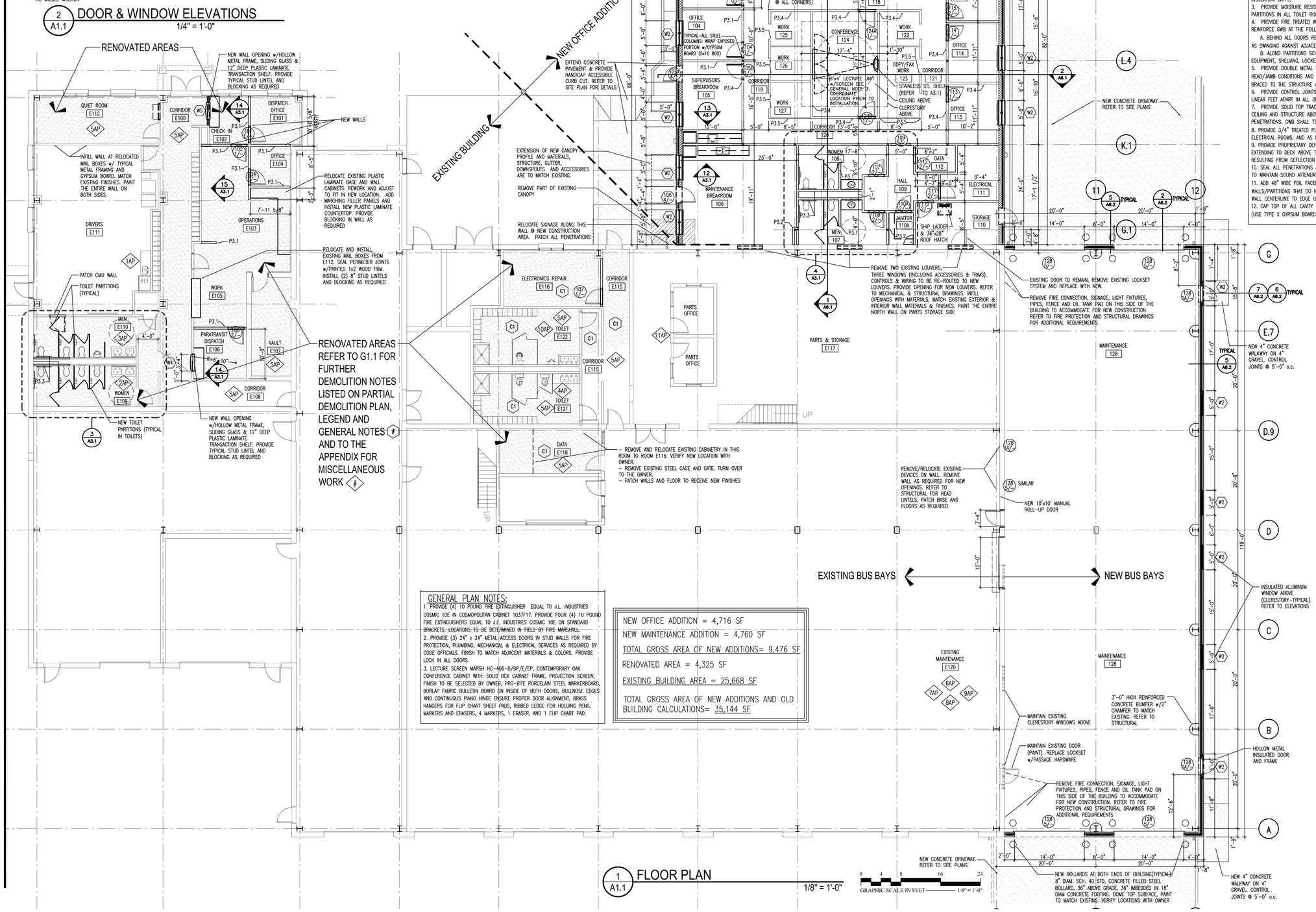

GENERAL PLAN NOTES:

1. PROVIDE (4) 10 POUND FIRE EXTINGUISHER EQUAL TO J.L. INDUSTRIES COSMIC 10E IN COSMOPOLITAN CABINET 1037F17. PROVIDE FOUR (4) 10 POUND FIRE EXTINGUISHERS EQUAL TO J.L. INDUSTRIES COSMIC 10E ON STANDARD BRACKETS. LOCATIONS TO BE DETERMINED IN FIELD BY FIRE MARSHALL.
2. PROVIDE (3) 24" x 24" METAL ACCESS DOORS IN STUD WALLS FOR FIRE PROTECTION, PLUMBING, MECHANICAL & ELECTRICAL SERVICES AS REQUIRED BY CODE OFFICIALS. FINISH TO MATCH ADJACENT MATERIALS & COLORS. PROVIDE LOCK IN ALL DOORS.
3. LECTURE SCREEN MARSH HC-406-D/DP/E/EP, CONTEMPORARY OAK CONFERENCE CABINET WITH: SOLID OCK CABINET FRAME, PROJECTION SCREEN, FINISH TO BE SELECTED BY OWNER, PRO-RITE PORCELAIN STEEL MARKERBOARD, BURLAP FABRIC BULLETIN BOARD ON INSIDE OF BOTH DOORS, BULLNOSE EDGES AND CONTINUOUS PIANO HINGE ENSURE PROPER DOOR ALIGNMENT, BRASS HANGERS FOR FLIP CHART SHEET PADS, RIBBED LEDGE FOR HOLDING PENS, MARKERS AND ERASERS, 4 MARKERS, 1 ERASER, AND 1 FLIP CHART PAD.

NEW OFFICE ADDITION	= 4,716 SF
NEW MAINTENANCE ADDITION	= 4,760 SF
TOTAL GROSS AREA OF NEW ADDITIONS	= 9,476 SF
RENOVATED AREA	= 4,325 SF
EXISTING BUILDING AREA	= 25,668 SF
TOTAL GROSS AREA OF NEW ADDITIONS AND OLD BUILDING CALCULATIONS	= 35,144 SF

1 / A1.1 FLOOR PLAN

1/8" = 1'-0"

TTA

ADDITIONS TO MAINTENANCE FACILITY

5201 NELSON ROAD (MAINTENANCE BLDG)
5210 NELSON ROAD (VACANT LOT)
CARY, NORTH CAROLINA

COMPLETE FACILITIES SOLUTIONS

MOSER MAYER PHOENIX ASSOCIATES, PA

328 E. Market Street
Suite 200
Greensboro, N. C. 27401
Telephone 336-373-9800
Fax 336-373-0077

KENNETH CHARLES MAYER JR. CERTIFIED ARCHITECT CERT. NO. 4305 NORTH CAROLINA GREENSBORO, N.C.

MOSER MAYER PHOENIX ASSOCIATES P.A. ARCHITECTURAL & ENGINEERING DESIGN CERT. NO. 361 NORTH CAROLINA GREENSBORO, N.C.

THIS DRAWING IS THE PROPERTY OF MOSER MAYER PHOENIX ASSOCIATES, P.A. AND IS NOT TO BE COPIED OR REPRODUCED IN PART OR WHOLE WITHOUT PERMISSION.

MULKEY ENGINEERS & CONSULTANTS
PO Box 33127
Raleigh, N.C. 27636
(919) 851-1912
(919) 851-1918 (FAX)
WWW.MULKEYINC.COM

RECORD DRAWING DISCLAIMER

TO THE BEST OF OUR KNOWLEDGE, THESE DRAWINGS HAVE BEEN REVISED TO REFLECT CHANGES MADE DURING THE CONSTRUCTION PROCESS, BASED UPON THE MARKED-UP DRAWINGS AND OTHER DATA FURNISHED TO THE ARCHITECT BY THE CONTRACTOR OR CONTRACTORS. THE ARCHITECT DOES NOT ASSURE THE ACCURACY OF THAT INFORMATION OR TAKE RESPONSIBILITY FOR ANY ERROR OR OMISSION INCORPORATED INTO THE DRAWINGS AS A RESULT. THE OWNER IS ADVISED TO OBTAIN INDEPENDENT VERIFICATION PRIOR TO USING THE INFORMATION CONTAINED HEREIN.

REVISIONS

NO.	DATE	DESCRIPTION
	01-26-08	RECORD DRAWINGS

DATE	APRIL 28, 2006
PROJECT NUMBER	05111.00 (05156.00)
SCALE	
DRAWN BY	

FIRST FLOOR ARCHITECTURAL PLAN

A1.1

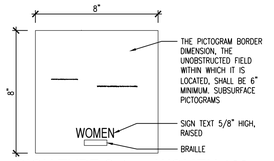

SIGN TYPE S-1 - WOMEN 108

SCALE: 3" = 1'-0"

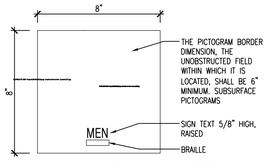

SIGN TYPE S-2 - MEN107

SCALE: 3" = 1'-0"

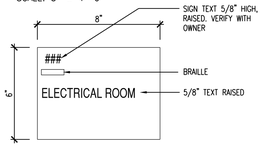

SIGN TYPE S-3 - ELECTRICAL 111

SCALE: 3" = 1'-0"

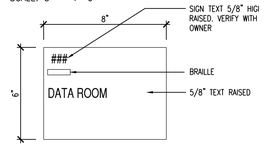

SIGN TYPE S-4 - DATA 112

SCALE: 3" = 1'-0"

SIGNAGE NOTES:

CONSTRUCTION: DOUBLE LAYER ACRYLIC SHEET. APPLIED RAISED GRAPHICS REPEATED IN GRADE 2 BRAILLE.
TEXT: UPPER CASE HELVETICA MEDIUM. LEFT JUSTIFIED.
COLOR: METALLIC SILVER SUBSURFACE PAINT WITH BLACK CHARACTERS.
NOTE: MAINTAIN 1/2" BORDER AROUND SIGN.

2 A2.1 TYPICAL INTERIOR SIGNAGE

CEILING LEGEND

	EXPOSED STRUCTURE (PAINTED) SEE FINISH SCHEDULE
	EXISTING 2X2 LAY-IN ACOUSTICAL TILE & SUSPENDED GRID. MAINTAIN AND REINSTALL EXISTING TILES, INSTALL NEW GRID. REFER TO MECHANICAL, FIRE PROTECTION AND ELECTRICAL DRAWINGS FOR EXTENT OF WORK AND RELOCATED FIXTURES
	NEW 2X2 LAY-IN ACOUSTICAL TILES & SUSPENDED CEILING GRID SYSTEM. REFER TO MECHANICAL, FIRE PROTECTION AND ELECTRICAL FOR SALVAGED AND RELOCATED FIXTURES
	2x4 LAY-IN LIGHT FIXTURE. REFER TO ELECTRICAL DRAWINGS FOR SALVAGED MATERIAL TO BE RE-INSTALLED
	SUSPENDED LIGHT FIXTURE
	RECESSED DOWN LIGHTS
	CEILING MOUNTED EXIT LIGHT. REFER TO ELECTRICAL DRAWINGS FOR SALVAGED MATERIAL TO BE RE-INSTALLED
S	SMOKE DETECTOR. REFER TO ELECTRICAL DRAWINGS FOR SALVAGED MATERIAL TO BE RE-INSTALLED
	SUPPLY GRILLE. REFER TO MECHANICAL FOR SALVAGED MATERIAL TO BE RE-INSTALLED
	RETURN GRILLE. REFER TO MECHANICAL FOR SALVAGED MATERIAL TO BE RE-INSTALLED
	EXHAUST GRILLE. REFER TO MECHANICAL FOR SALVAGED MATERIAL TO BE RE-INSTALLED
	EXISTING SPRINKLER HEADS (RELOCATED)
	NEW SPRINKLER HEADS

CEILING PLAN NOTES

1. THE ARCHITECTURAL REFLECTED CEILING PLAN IS PROVIDED FOR GENERAL COORDINATION OF CEILING ITEMS PROVIDED BY THE MECHANICAL, FIRE PROTECTION AND ELECTRICAL CONTRACTORS. MINOR INCONSISTENCIES IN DESIGNATIONS OR INADVERTENT OMISSIONS ON THE REFLECTED CEILING PLANS DO NOT CONSTITUTE DELETION OF ANY ITEM PROVIDED BY THE OTHER CONTRACTORS. THE FIRE PROTECTION, MECHANICAL AND ELECTRICAL DRAWINGS SHALL DICTATE THE SCOPE OF WORK PROVIDED BY THOSE CONTRACTORS.
2. REFER TO FLOOR PLAN FOR ROOM DIMENSIONS.
3. THE GENERAL CONTRACTOR SHALL PAINT EXPOSED STEEL FRAMES. COLOR TO BE SELECTED BY ARCHITECT- REFER TO FINISH SCHEDULE AND SPECIFICATIONS. FOR LOCATION AND TYPE.
4. CEILING HEIGHTS:
- REFER TO SECTION 1, 2/A6.1, AND FINISH SCHEDULE FOR HEIGHTS.
- PROVIDE 8" WIDE GYPSUM BOARD BULK HEADS AT TRANSITIONS BETWEEN DIFFERENT CEILING HEIGHTS. MAINTAIN MINIMUM 4" BETWEEN CEILINGS AND BOTTOM OF GYPSUM BOARD.

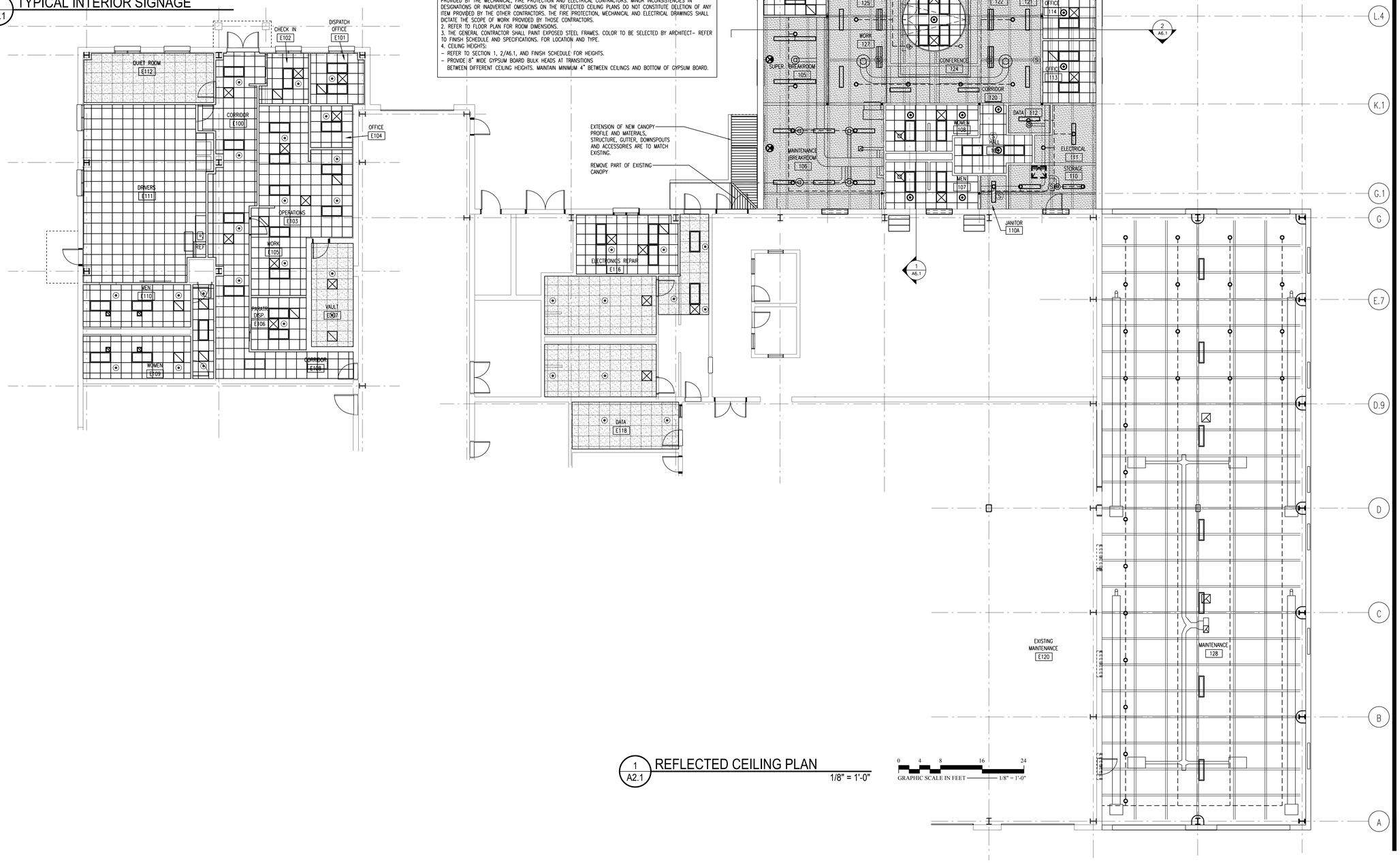

1 A2.1 REFLECTED CEILING PLAN

1/8" = 1'-0"

0 4 8 16 24

GRAPHIC SCALE IN FEET 1/8" = 1'-0"

ADDITIONS TO MAINTENANCE FACILITY

5201 NELSON ROAD (MAINTENANCE BLDG)
5210 NELSON ROAD (VACANT LOT)
CARY, NORTH CAROLINA

COMPLETE FACILITIES SOLUTIONS

MOSER MAYER PHOENIX ASSOCIATES, PA

328 E. Market Street
Suite 200
Greensboro, N.C. 27401
Telephone 336-373-9800
Fax 336-373-0077

CERT. NO. 4305

CERT. NO. 361

THIS DRAWING IS THE PROPERTY OF MOSER MAYER PHOENIX ASSOCIATES, P.A. AND IS NOT TO BE COPIED OR REPRODUCED IN PART OR WHOLE WITHOUT PERMISSION.

MULKEY ENGINEERS & CONSULTANTS
PO Box 33157
Raleigh, N.C. 27636
(919) 851-1912
(919) 851-1918 (FAX)
WWW.MULKEYINC.COM

RECORD DRAWING DISCLAIMER

TO THE BEST OF OUR KNOWLEDGE, THESE DRAWINGS HAVE BEEN REVISED TO REFLECT CHANGES MADE DURING THE CONSTRUCTION PROCESS, BASED UPON THE MARKED-UP DRAWINGS AND OTHER DATA FURNISHED TO THE ARCHITECT BY THE CONTRACTOR OR CONTRACTORS. THE ARCHITECT DOES NOT ASSURE THE ACCURACY OF THAT INFORMATION OR [illegible] RESPONSIBILITY FOR ANY ERROR OR [illegible] INCORPORATED INTO THE DRAW[illegible] BUILT. THE OWNER IS ADV[illegible] INDEPENDENT VE[illegible] PRIOR TO USING THE INFORMATION [illegible] HEREIN.

(PLAN) NORTH

REVISIONS

NO.	DATE	DESCRIPTION
	01-26-08	RECORD DRAWINGS

DATE	APRIL 28, 2006
PROJECT NUMBER	05111.00 (05156.00)
SCALE	
DRAWN BY	

REFLECTED CEILING PLAN
FINISH SCHEDULE

A2.1

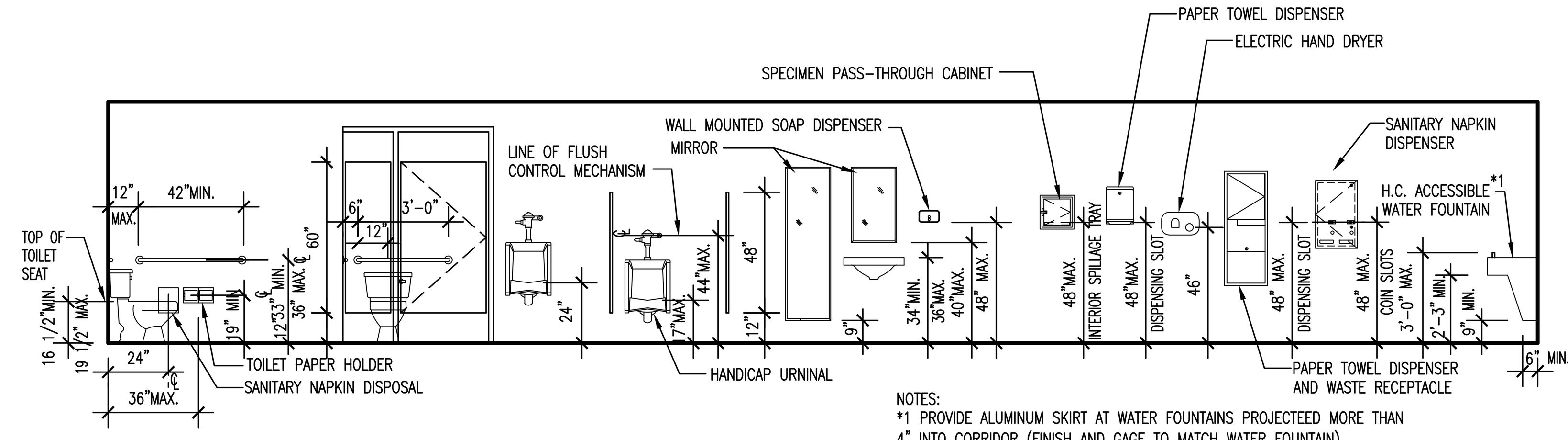

1 / A3.1 TYPICAL MOUNTING HEIGHTS
1/4" = 1'-0"

TOILET ACCESSORIES SCHEDULE

1A	36" GRAB BAR
1B	42" GRAB BAR
2	18" X 36" FRAMED MIRROR
3	SANITARY NAPKIN DISPOSAL
4	SEMI-RECESSED PAPER TOWEL DISPENSER w/ WASTE DISPOSAL
5	TWIN JUMBO-ROLL TOILET TISSUE DISPENSER
6	SOAP DISPENSER - WALL MOUNTED
7	MOP AND BROOM HOLDER IN JANITORS CLOSET 057A
8	TOILET SEAT COVER DISPENSER

NOTES:
1. PROVIDE PRESSURE TREATED BLOCKING IN WALLS PER MANUFACTURER'S REQUIREMENT.

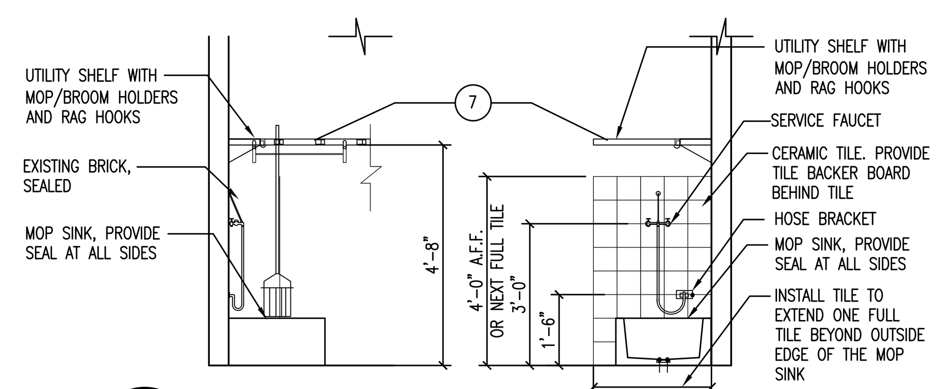

2 / A3.1 TYPICAL JANITOR'S ROOM
3/8" = 1'-0"

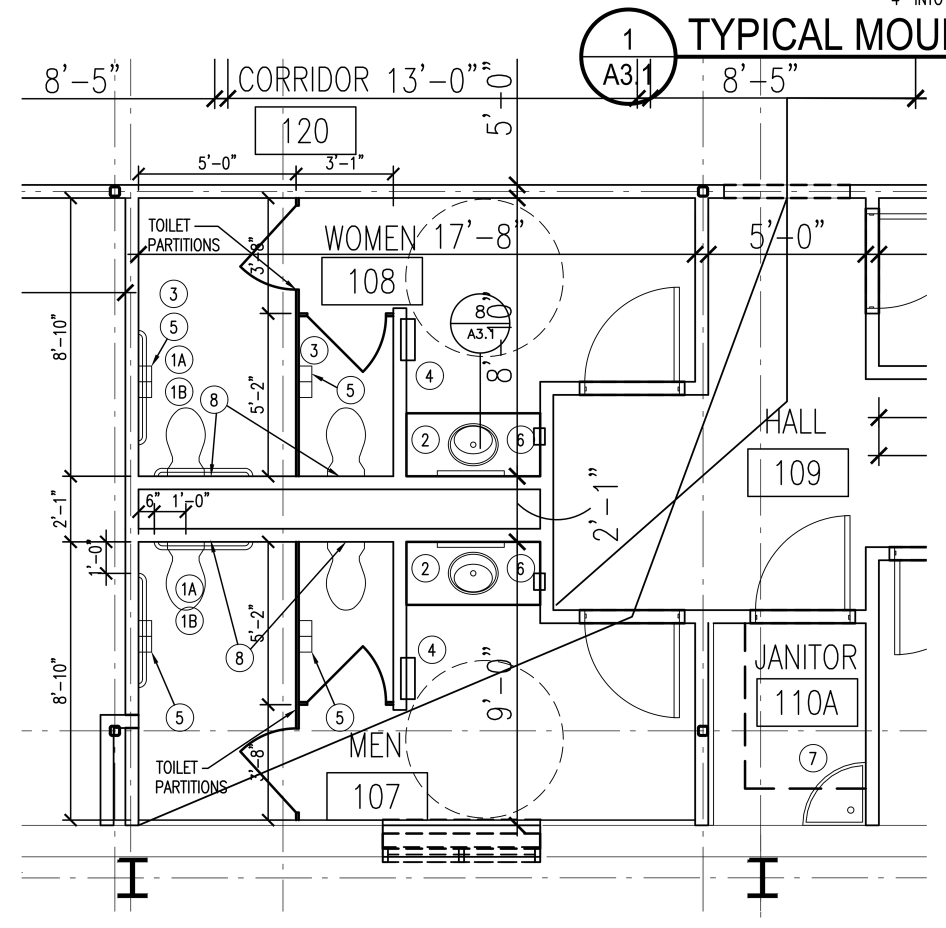

4 / A3.1 ENLARGED PLAN - TOILETS 107 AND 108
1/4" = 1'-0"
GRAPHIC SCALE IN FEET

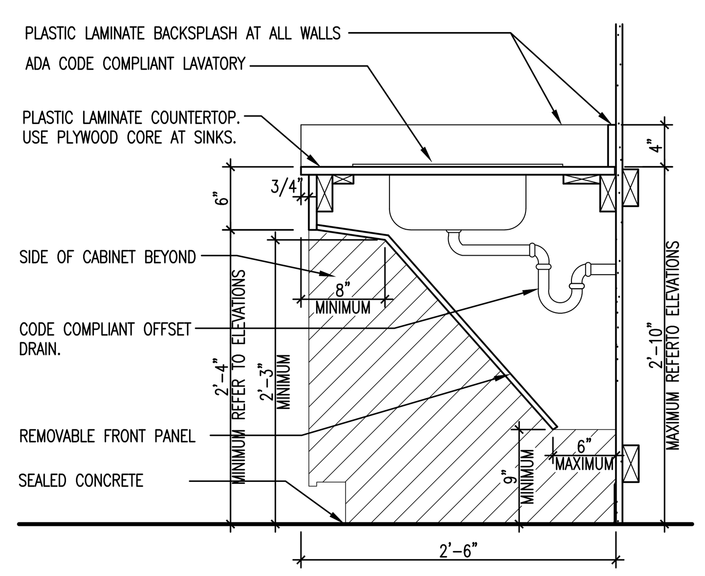

7 / A3.1 TYPICAL SINK DETAIL
1" = 1'-0"

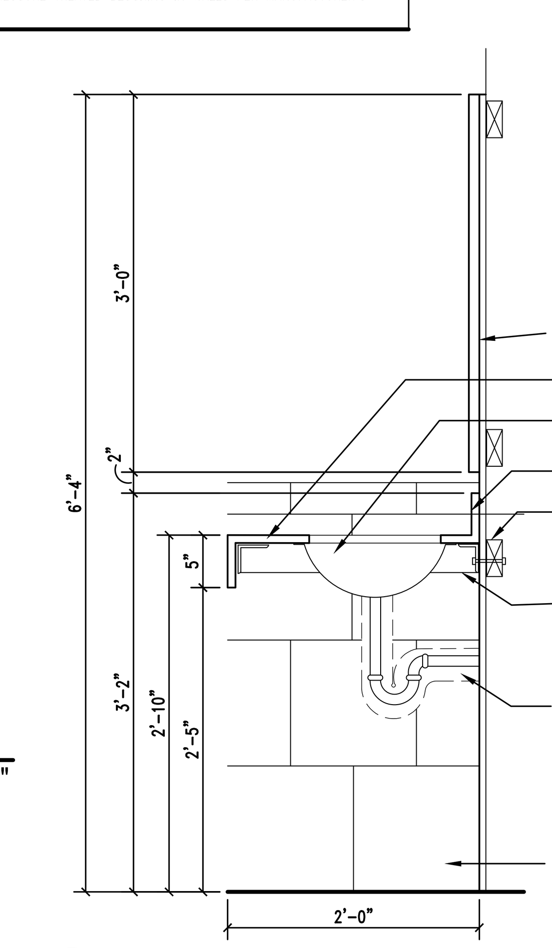

8 / A3.1 TYPICAL LAVATORY DETAIL
1" = 1'-0"

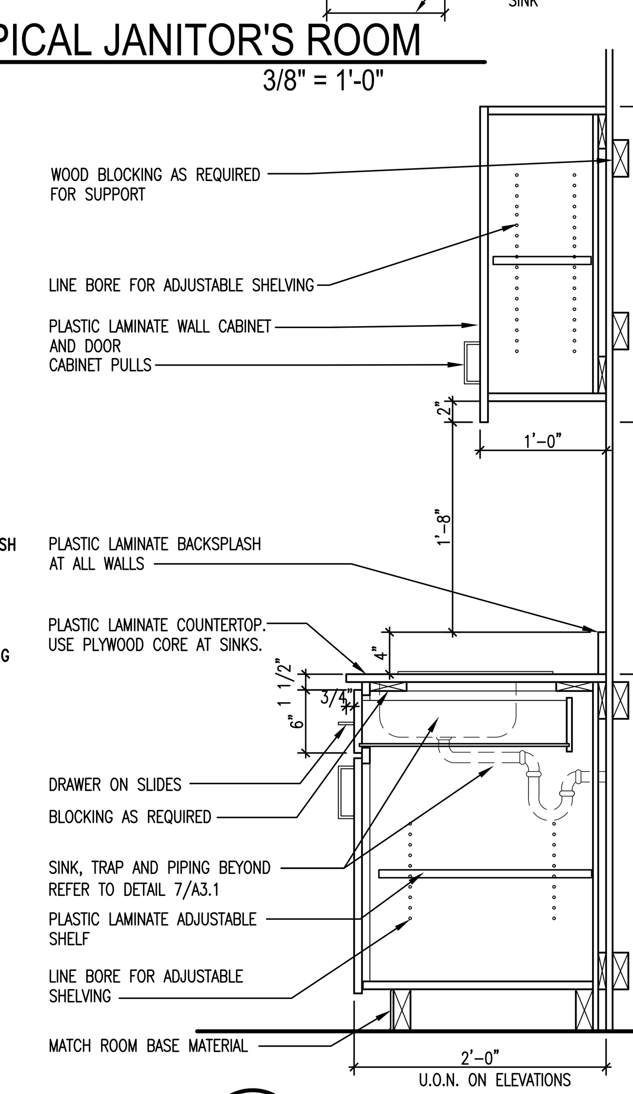

9 / A3.1 TYPICAL SINK DETAIL
1" = 1'-0"

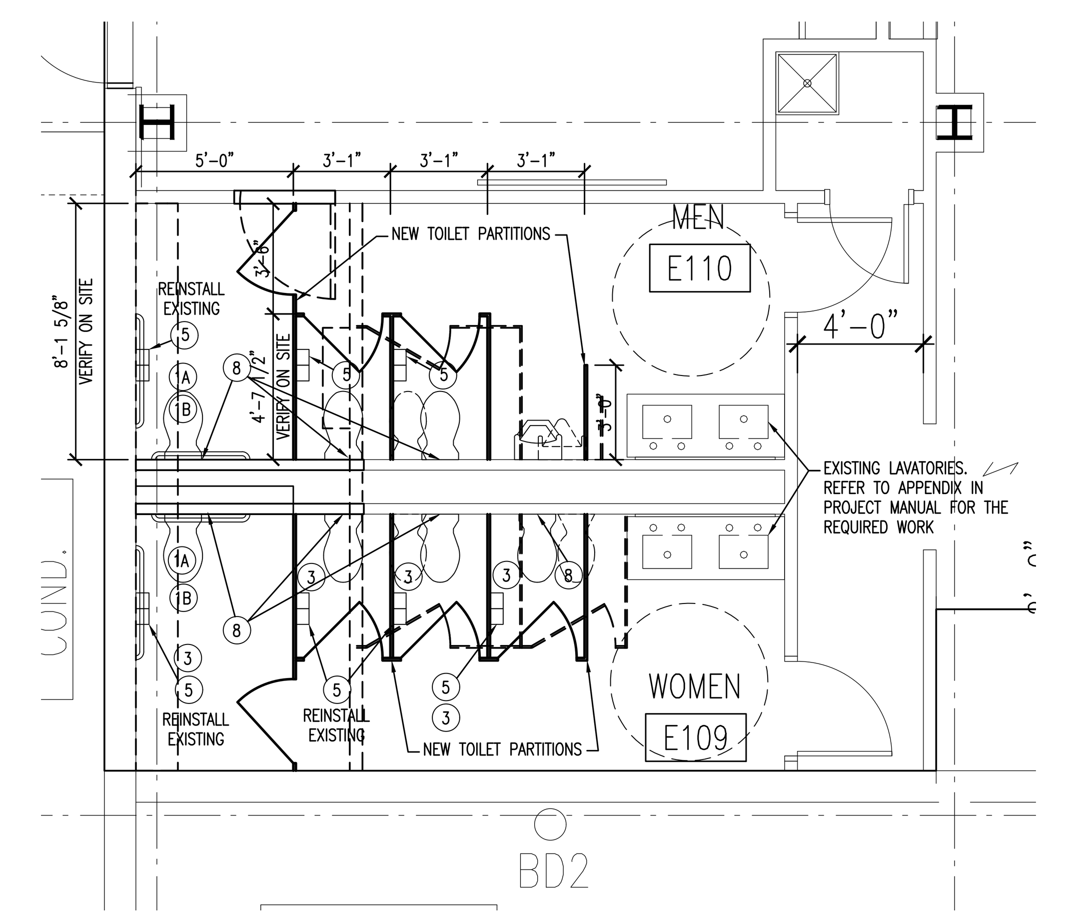

3 / A3.1 ENLARGED PLAN - TOILETS E109 AND E110
1/4" = 1'-0"
GRAPHIC SCALE IN FEET

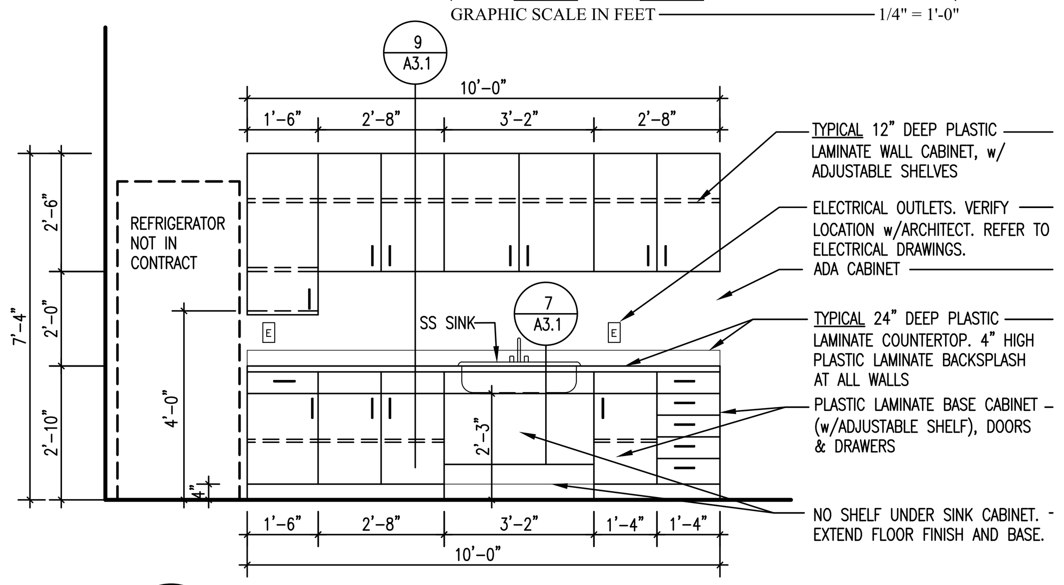

12 / A3.1 INTERIOR ELEVATION
MAINTENANCE BREAKROOM
3/8" = 1'-0"

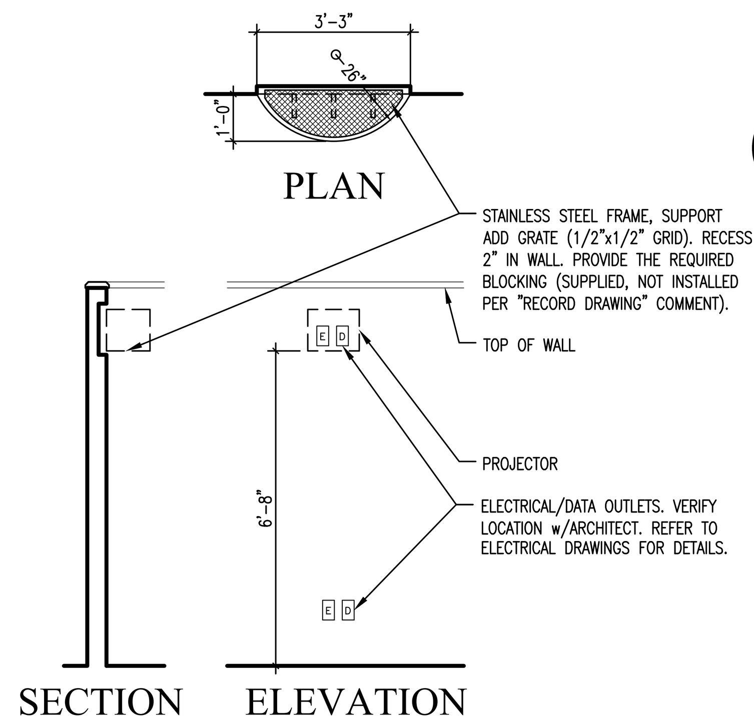

14 / A3.1 PROJECTOR SHELF
CONFERENCE 124
3/8" = 1'-0"

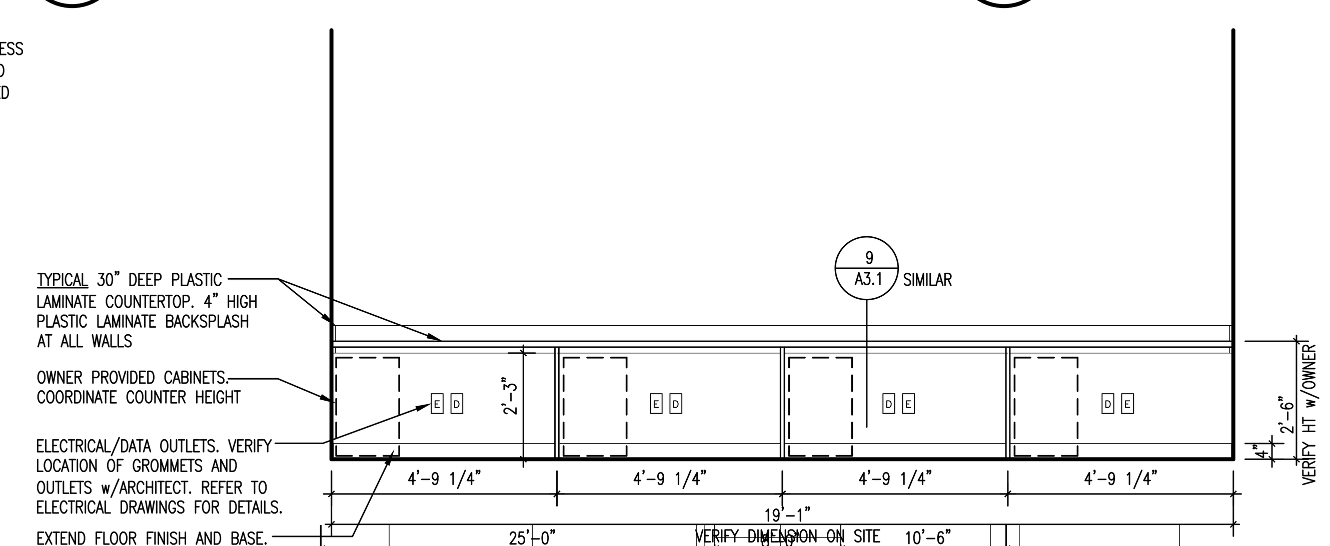

15 / A3.1 INTERIOR ELEVATION
OPERATION E103
3/8" = 1'-0"

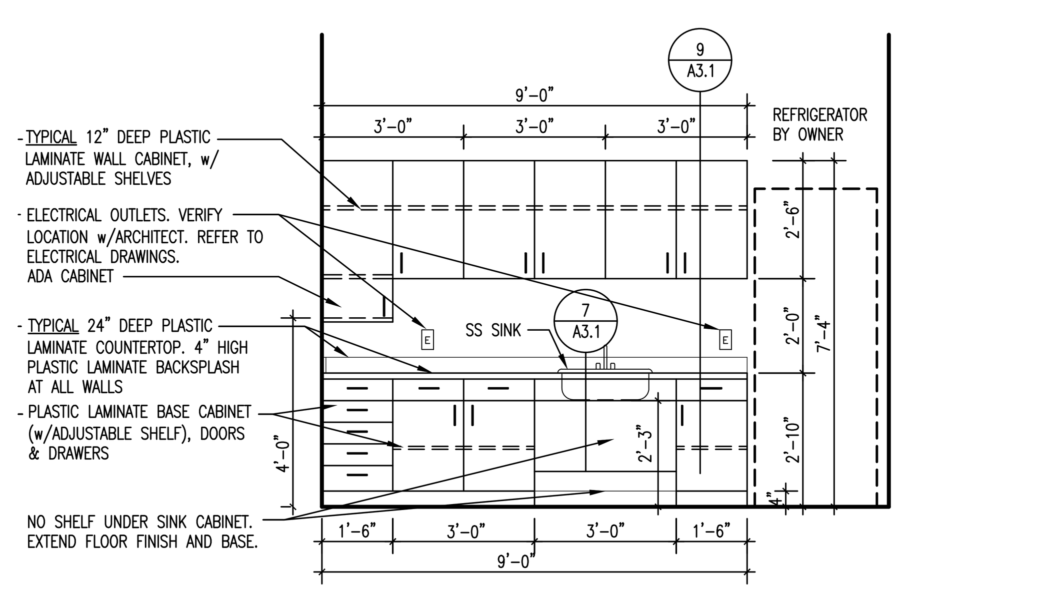

13 / A3.1 INTERIOR ELEVATION
SUPERVISORS BREAKROOM
3/8" = 1'-0"

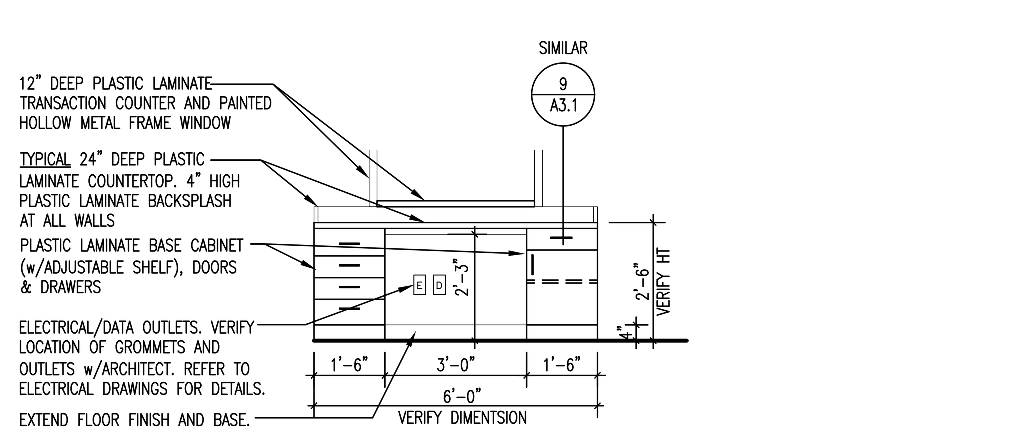

14 / A3.1 INTERIOR ELEVATION
CHECK IN AND DISPATCH
3/8" = 1'-0"

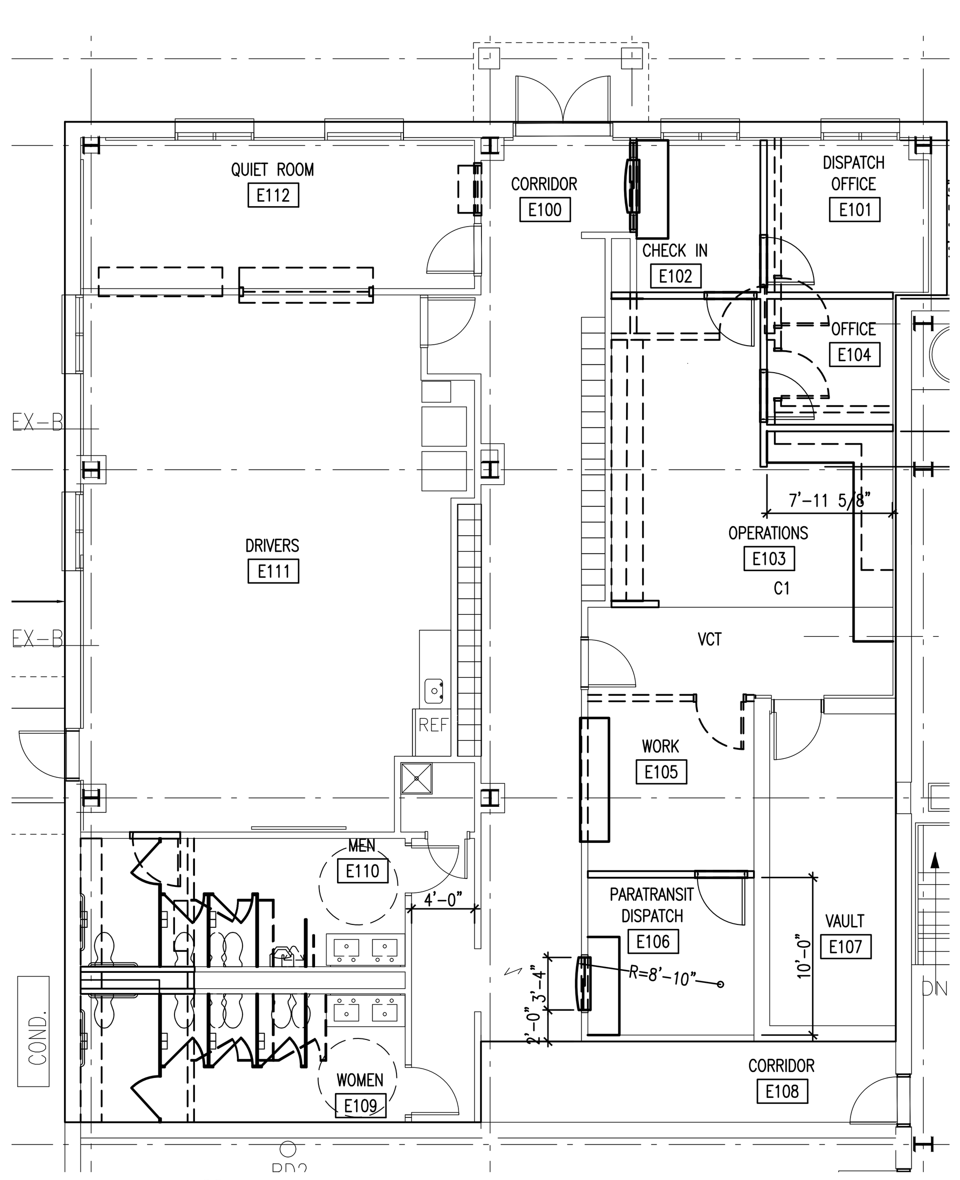

10 / A3.1 EXISTING UPFIT FINISH PLAN
1/8" = 1'-0"
GRAPHIC SCALE IN FEET

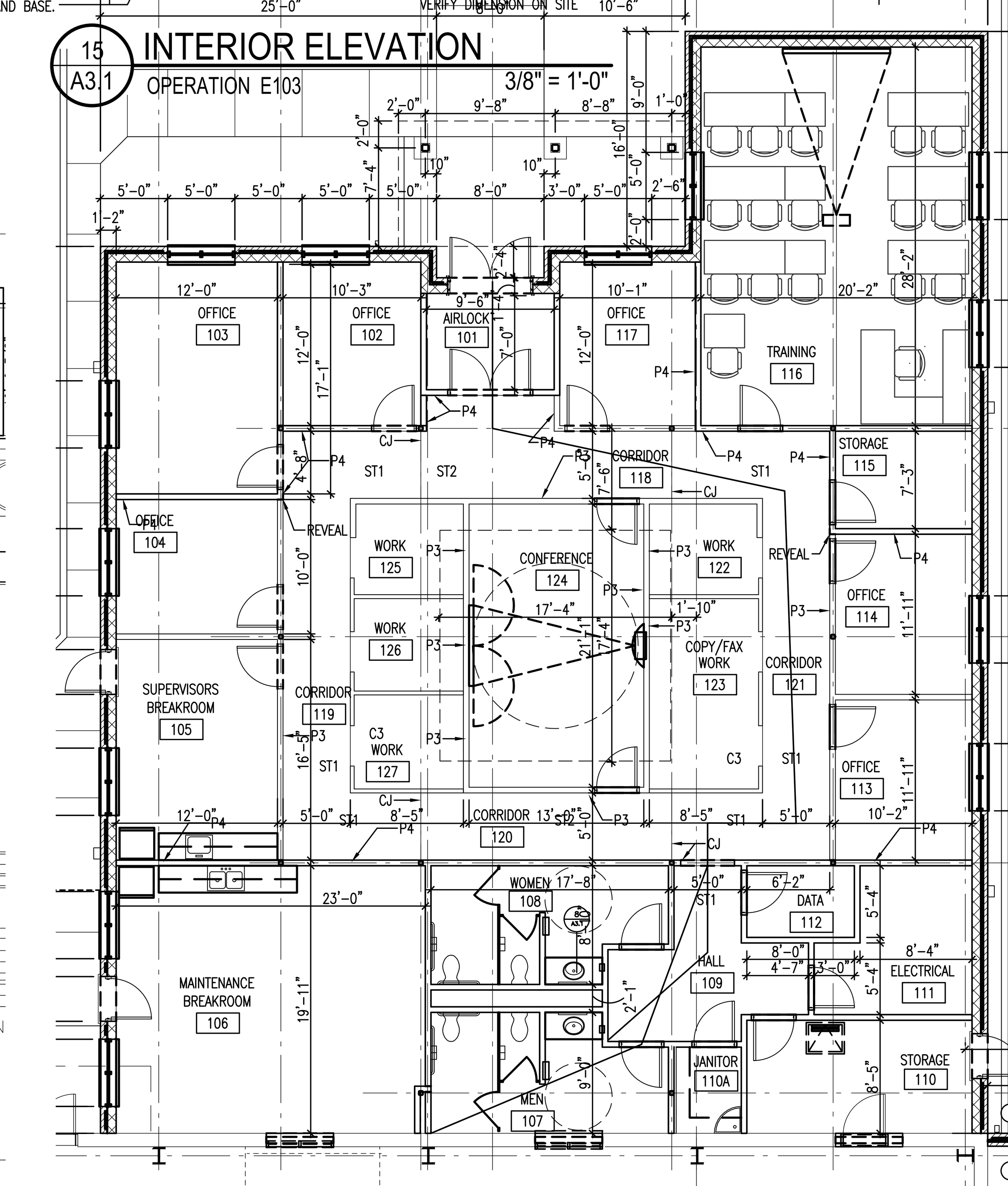

11 / A3.1 NEW ADDITION FINISH PLAN
1/8" = 1'-0"

ROOM FINISH SCHEDULE

DESCRIPTION NO.	NAME	FLOOR	BASE	WALL FINISH	CEILING TYPE	HT.	REFERENCED NOTES
NEW ADDITION							
101	AIRLOCK	WOC	R	GYP/P4, BLOCK	ACT	9'-0"	–
102	OFFICE	C1	R	GYP/P1, BLOCK	ACT	9'-0"	–
103	OFFICE	C1	R	GYP/P1, BLOCK	ACT	9'-0"	–
104	OFFICE	C1	R	GYP/P1, P4, BLOCK	EXP/P3, EXP	9'-0"	NOTE 16, 19
105	SUPERVISORS BREAKROOM	CONC/ST1	R	GYP/P1, P4, BLOCK	EXP/P3, EXP	–	NOTE 3, 16, 19
106	MAINTENANCE BREAKROOM	CONC/S	R	GYP/P1, BLOCK, EXIST	EXP/P3, EXP	–	NOTE 3, 6, 16
107	MEN	CONC/ST1	CWT1	GYP/P2, CWT1, EXIST	ACT	9'-0"	NOTE 1, 2, 6
108	WOMEN	CONC/ST1	CWT1	GYP/P2, CWT1	ACT	9'-0"	NOTE 1, 2
109	HALL	CONC/ST1	R	GYP/P4	ACT	9'-0"	–
110	STORAGE	CONC/S	R	GYP/P1, BLOCK/P1, EXIST	EXP/P3, EXP	–	NOTE 6, 16, 22
110A	JANITOR	CONC/S	CWT2	GYP/P1, CWT2, EXIST	EXP/P3, EXP	–	NOTE 4, 6, 16
111	ELECTRICAL	CONC/S	R	GYP/P1, BLOCK/P1	EXP/P3, EXP	–	NOTE 16, 22
112	DATA	CONC/S	R	GYP/P1	EXP/P3, EXP	–	NOTE 16
113	OFFICE	C1	R	GYP/P1, P4, BLOCK	ACT	7'-8"	NOTE 19
114	OFFICE	C1	R	GYP/P1, P4, BLOCK	ACT	7'-8"	NOTE 19
115	STORAGE	CONC/S	R	GYP/P1, BLOCK	EXP/P3, EXP	–	NOTE 16
116	TRAINING	C2	R	GYP/P1, BLOCK	ACT	9'-0"	–
117	OFFICE	C1	R	GYP/P1, BLOCK	EXP/P3, EXP	–	NOTE 16, 19
118	CORRIDOR	CONC/ST1,2	R	GYP/P3, P4	EXP/P3, EXP	–	NOTE 5, 16, 19
119	CORRIDOR	CONC/ST1,2	R	GYP/P2, P3	EXP/P3, EXP	–	NOTE 5, 16, 19
120	CORRIDOR	CONC/ST1,2	R	GYP/P3, P4	EXP/P3, EXP	–	NOTE 5, 16, 19
121	CORRIDOR	CONC/ST1,2	R	GYP/P2, P3	EXP/P3, EXP	–	NOTE 5, 16, 19
122	WORK	C3	R	GYP/P1, P3	EXP/P3, EXP	–	NOTE 16, 19
123	COPY/FAX WORK	C3	R	GYP/P1, P3	EXP/P3, EXP	–	NOTE 16, 19
124	CONFERENCE	C2	R	GYP/P1, P3	SC/ACT, EXP/P3, EXP	9'-0"	NOTE 16
125	WORK	C3	R	GYP/P1, P3	EXP/P3, EXP	–	NOTE 16, 19
126	WORK	C3	R	GYP/P1, P3	EXP/P3, EXP	–	NOTE 16, 19
127	WORK	C3	R	GYP/P1, P3	EXP/P3, EXP	–	NOTE 16, 19
128	MAINTENANCE	CONC/S	–	EXIST, BRICK	EXP/P3, EXP	–	NOTE 6, 16
EXISTING UPFIT							
E100	CORRIDOR	EXIST	EXIST	EXIST, GYP/P6	EXIST ACT	–	NOTE 7
E101	DISPATCH OFFICE	C1	R	GYP/P6	ACT	9'-0"	–
E102	CHECK-IN	C1	R	GYP/P6	ACT	9'-0"	–
E103	OPERATIONS	C1, VCT	R	GYP/P6	ACT	9'-0"	NOTE 3
E104	OFFICE	C1	R	GYP/P6	ACT	9'-0"	–
E105	WORK	VCT	R	GYP/P6	ACT	9'-0"	–
E106	PARATRANSIT DISPATCH	C1	R	GYP/P6	ACT	9'-0"	NOTE 3
E107	VAULT	EXIST	EXIST	EXIST	EXISTING	–	–
E108	CORRIDOR	EXIST	EXIST	EXIST		–	–
E109	WOMEN	S	R	GYP/P6, BLOCK/P6	ACT	9'-0"	NOTE 12
E110	MEN	S	R	GYP/P6	ACT	9'-0"	NOTE 12
E111	DRIVERS	EXIST	EXIST	EXIST, GYP/P6	EXIST	–	NOTE 10
E112	QUIET ROOM			EXIST, GYP/P6	NEW ACT	–	NOTE 9
E115	CORRIDOR	EXIST	EXIST	EXIST, GYP/P6	EXISTING ACT	9'-0"	NOTE 8, 11
E116	ELECTRONICS REPAIR	EXIST	EXIST	EXIST, GYP/P6	ACT	9'-0"	NOTE 7
E117	PARTS & STORAGE	EXIST	EXIST	EXIST	EXIST	–	–
E118	DATA	EXIST	EXIST	EXIST	ACT	–	–
E121/122	TOILETS	EXIST	EXIST	EXIST	ACT		–

FINISH LEGEND:

ACT	ACOUSTICAL CEILING TILE
BLOCK	EXPOSED COLOR GROUND FACE CONCRETE MASONRY UNITS (EXPOSED)
C	CARPET
CT	CERAMIC TILE
CWT	CERAMIC WALL TILE
EXIST	EXISTING
EXP	EXPOSED
GYP	GYPSUM BOARD
P	PAINT
PLAM	PLASTIC LAMINATE
R	RESILIENT BASE
S	SEALER FOR CONCRETE
SC	SPECIALTY CEILING
ST	STAIN FOR CONCRETE
VCT	VINYL COMPOSITION TILE
WOC	WALK OFF CARPET

FINISH NOTES:

1. CWT WAINSCOT SHALL BE 3 FULL TILES HIGH A.F.F. WITH 3" CWT BULLNOSE ON TOP. INSTALL TILES IN A RUNNING BOND PATTERN. TERMINATE WAINSCOT AT WALL WITH MIRROR IN LAVATORY ALCOVE. SEE DRAWING 8/A3.1.
2. PLAM1 COUNTERTOP.
3. PLAM 2 COUNTERTOP AND PLAM 3 CABINET FACES.
4. SEE DRAWING 2/A3.1 FOR LOCATION OF CWT AT MOP SINK.
5. SEE FINISH PLAN ON A3.1 FOR STAINED CONCRETE FLOOR PATTERN.
6. EXISTING BRICK SHALL REMAIN, NOT PAINTED.
7. PAINT WEST WALL ONLY TO MATCH EXISTING.
8. PAINT EAST WALL ONLY TO MATCH EXISTING.
9. PAINT SOUTH WALL ONLY TO MATCH EXISTING.
10. PAINT NORTH AND SOUTH WALLS ONLY TO MATCH EXISTING.
11. SEE 1/A2.1 REFLECTED CEILING PLAN FOR LOCATION OF PARTIALLY REPLACED CEILING.
12. STRIP EXISTING CONCRETE FLOOR OF CURRENT SEALER. CLEAN EXISITNG CONCRETE FLOOR BEFORE RESEALING.
13. NOT USED.
14. SALVAGE AND REUSE LAVATORY TOP AND RESURFACE WTIH PLAM1.
15. WALLS OF CLERESTORY SHALL BE P4.
16. EXPOSED STRUCTURE SHALL BE P3. METAL DECK AND HVAC DUCTWORK SHALL REMAIN UNPAINTED.
17. WOOD WALL CAPS SHALL BE STAINED.
18. HOLLOW METAL DOOR FRAMES SHALL BE P5.
19. SEE FINISH PLAN ON A3.1 FOR PAINT LOCATIONS.
20. METAL REVEAL SHALL BE 1" WIDE X 1/2" DEEP X HEIGHT OF LOWEST WALL WHERE LOCATED (APPROX. 8'-2") WITH A BRUSHED ALUMINUM FINISH. SEE FINISH PLAN ON SHEET A3.1 FOR LOCATIONS.
21. PAINT EAST WALL P3, VERIFY WITH OWNER PRIOR TO PAINTING.
22. GROUND FACE MASONRY UNITS SHALL NOT BE PAINTED. STANDARD CONCRETE MASONRY UNITS SHALL BE PAINTED.

TTA

ADDITIONS TO MAINTENANCE FACILITY

5201 NELSON ROAD (MAINTENANCE BLDG)
5210 NELSON ROAD (VACANT LOT)
CARY, NORTH CAROLINA

COMPLETE FACILITIES SOLUTIONS
MOSER MAYER PHOENIX ASSOCIATES, PA
328 E. Market Street
Suite 200
Greensboro, N. C. 27401
Telephone 336-373-9800
Fax 336-373-0077

KENNETH CHARLES MAYER, JR. REGISTERED ARCHITECT CERT. NO. 4305 NORTH CAROLINA GREENSBORO N.C.
MOSER MAYER PHOENIX ASSOCIATES P.A. REGISTERED ARCHITECTURAL CORPORATION CERT. NO. 361 NORTH CAROLINA GREENSBORO N.C.

THIS DRAWING IS THE PROPERTY OF MOSER MAYER PHOENIX ASSOCIATES, P.A. AND IS NOT TO BE COPIED OR REPRODUCED IN PART OR WHOLE WITHOUT PERMISSION.

MULKEY ENGINEERS & CONSULTANTS
PO Box 33127
Raleigh, N.C. 27636
(919) 851-1912
(919) 851-1918 (FAX)
WWW.MULKEYINC.COM

RECORD DRAWING DISCLAIMER

TO THE BEST OF OUR KNOWLEDGE, THESE DRAWINGS HAVE BEEN REVISED TO REFLECT CHANGES MADE DURING THE CONSTRUCTION PROCESS, BASED UPON THE MARKED-UP DRAWINGS AND OTHER DATA FURNISHED TO THE ARCHITECT BY THE CONTRACTOR OR CONTRACTORS. THE ARCHITECT DOES NOT ASSURE THE ACCURACY OF THAT INFORMATION OR TAKE RESPONSIBILITY FOR ANY ERROR OR OMISSION INCORPORATED INTO THE DRAWINGS AS A RESULT. THE OWNER IS ADVISED TO OBTAIN INDEPENDENT VERIFICATION PRIOR TO USING THE INFORMATION CONTAINED HEREIN.

REVISIONS

NO.	DATE	DESCRIPTION
	01-26-08	RECORD DRAWINGS

DATE	APRIL 28, 2006
PROJECT NUMBER	05111.00 (05156.00)
SCALE	
DRAWN BY	

ENLARGED TOILET PLANS
INTERIOR ELEVATIONS

A3.1

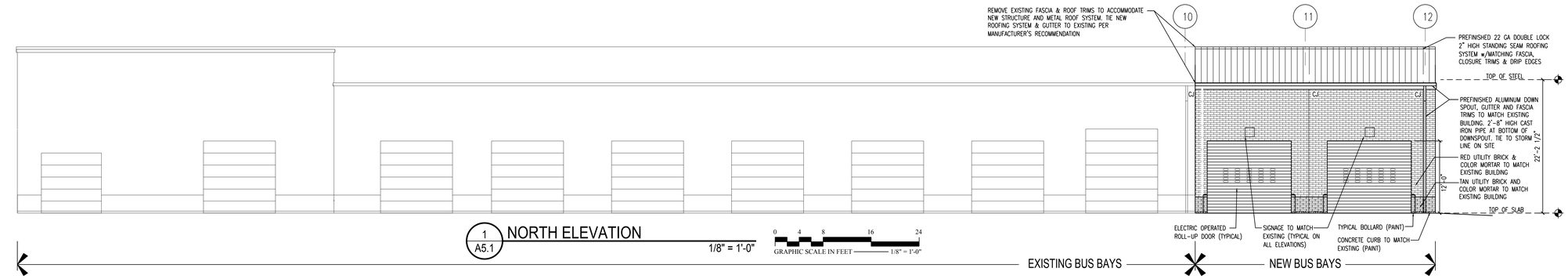

1 A5.1 NORTH ELEVATION

1/8" = 1'-0"

GRAPHIC SCALE IN FEET 0 4 8 16 24 — 1/8" = 1'-0"

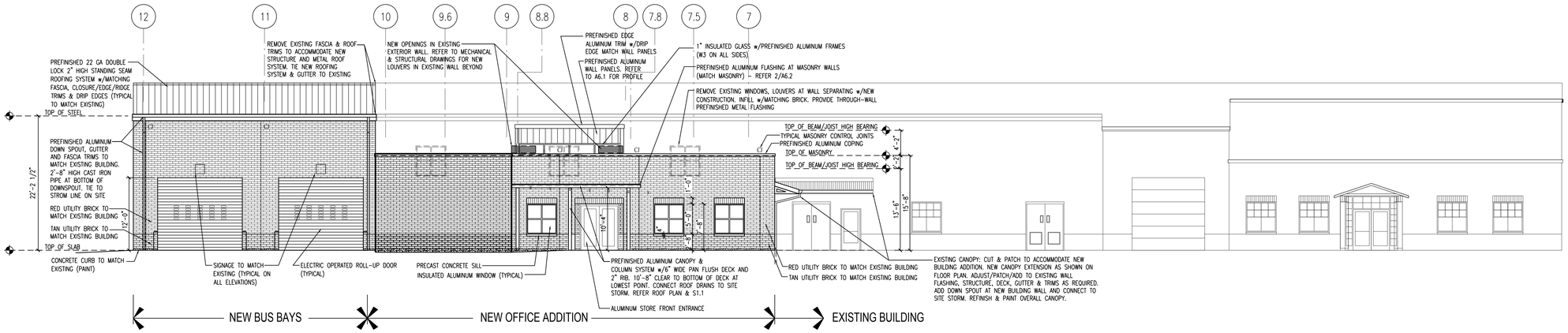

2 A5.1 SOUTH ELEVATION

1/8" = 1'-0"

GRAPHIC SCALE IN FEET 0 4 8 16 24 — 1/8" = 1'-0"

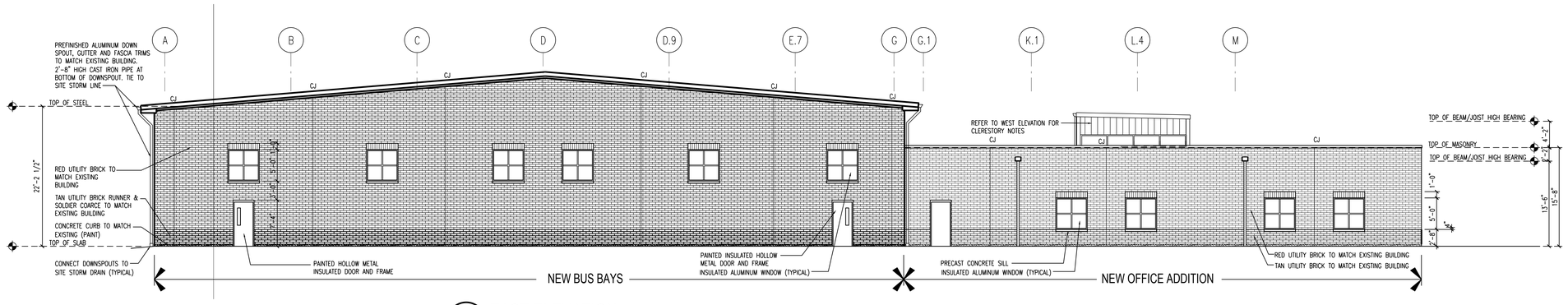

3 A5.1 EAST ELEVATION

1/8" = 1'-0"

GRAPHIC SCALE IN FEET 0 4 8 16 24 — 1/8" = 1'-0"

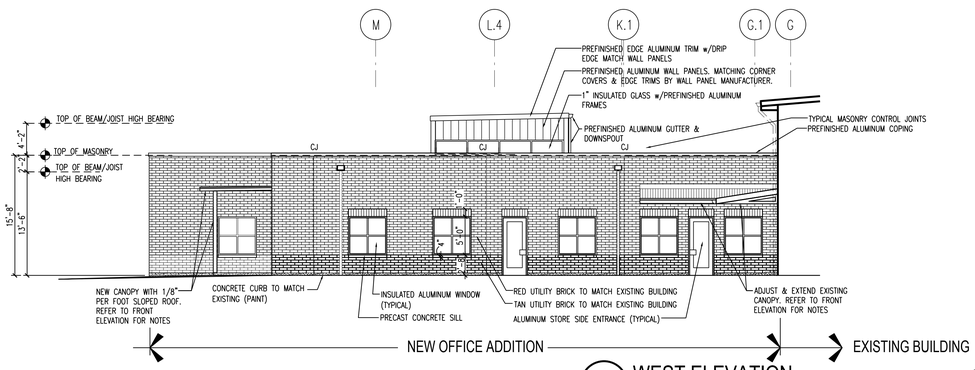

4 A5.1 WEST ELEVATION

1/8" = 1'-0"

GRAPHIC SCALE IN FEET 0 4 8 16 24 — 1/8" = 1'-0"

TTA

ADDITIONS TO MAINTENANCE FACILITY

5201 NELSON ROAD (MAINTENANCE BLDG)
5210 NELSON ROAD (VACANT LOT)
CARY, NORTH CAROLINA

COMPLETE FACILITIES SOLUTIONS

MOSER MAYER PHOENIX ASSOCIATES, PA

328 E. Market Street
Suite 200
Greensboro, N.C. 27401
Telephone 336-373-9800
Fax 336-373-0077

CERT. NO. 4305 — MOSER MAYER PHOENIX ASSOCIATES, PA — GREENSBORO, N.C.

CERT. NO. 361 — MOSER MAYER PHOENIX ASSOCIATES, PA — GREENSBORO, N.C.

THIS DRAWING IS THE PROPERTY OF MOSER MAYER PHOENIX ASSOCIATES, P.A. AND IS NOT TO BE COPIED OR REPRODUCED IN PART OR WHOLE WITHOUT PERMISSION.

MULKEY ENGINEERS & CONSULTANTS
PO Box 33127
Raleigh, N.C. 27636
(919) 851-1912
(919) 851-1918 (FAX)
WWW.MULKEYINC.COM

RECORD DRAWING DISCLAIMER

TO THE BEST OF OUR KNOWLEDGE, THESE DRAWINGS HAVE BEEN REVISED TO REFLECT CHANGES MADE DURING THE CONSTRUCTION PROCESS, BASED UPON THE MARKED-UP DRAWINGS AND OTHER DATA FURNISHED TO THE ARCHITECT BY THE CONTRACTOR OR CONTRACTORS. THE ARCHITECT DOES NOT ASSURE THE ACCURACY OF THAT INFORMATION OR TAKE RESPONSIBILITY FOR ANY ERROR OR OMISSION INCORPORATED INTO THE DRAWINGS AS A RESULT. THE OWNER IS ADVISED TO OBTAIN INDEPENDENT VERIFICATION PRIOR TO USING THE INFORMATION CONTAINED HEREIN.

REVISIONS

NO.	DATE	DESCRIPTION
	01-26-08	RECORD DRAWINGS

DATE	APRIL 28, 2006
PROJECT NUMBER	05111.00 (05156.00)
SCALE	
DRAWN BY	

EXTERIOR ELEVATIONS

A5.1

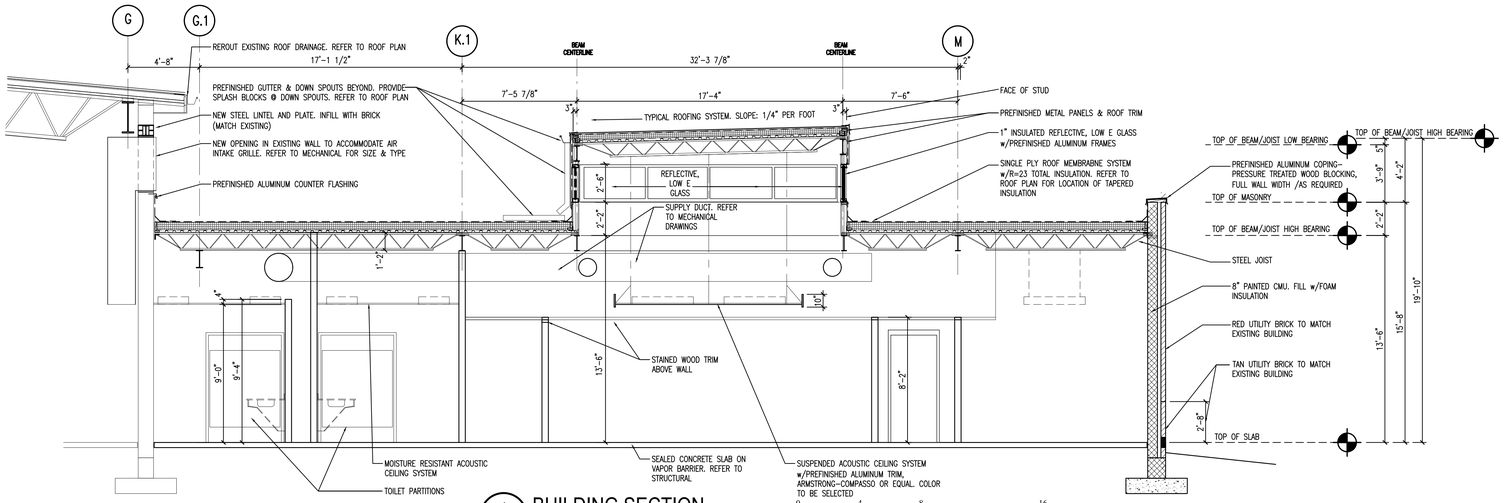

1 A6.1 BUILDING SECTION
1/4" = 1'-0"

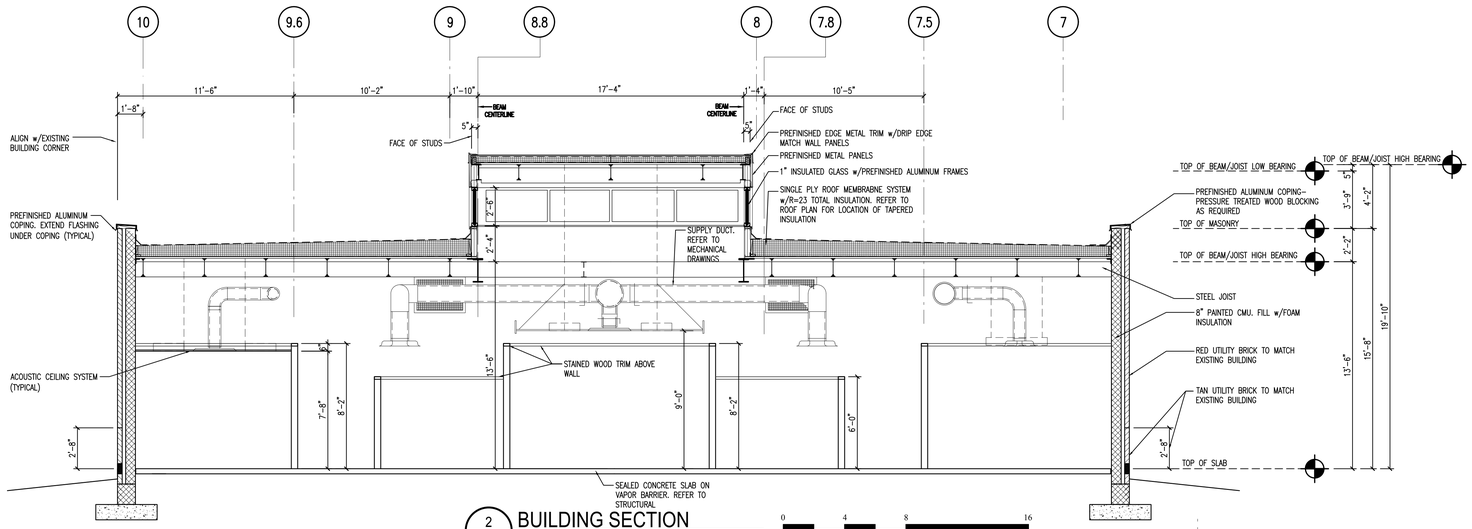

2 A6.1 BUILDING SECTION
1/4" = 1'-0"

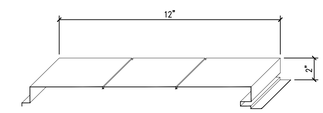

5 A6.1 METAL WALL PANEL - PROFILE
NOT TO SCALE

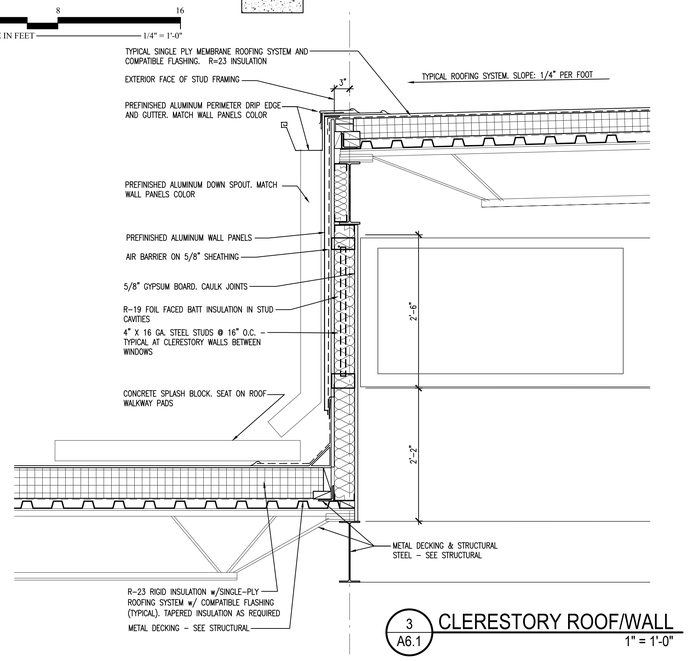

3 A6.1 CLERESTORY ROOF/WALL
1" = 1'-0"

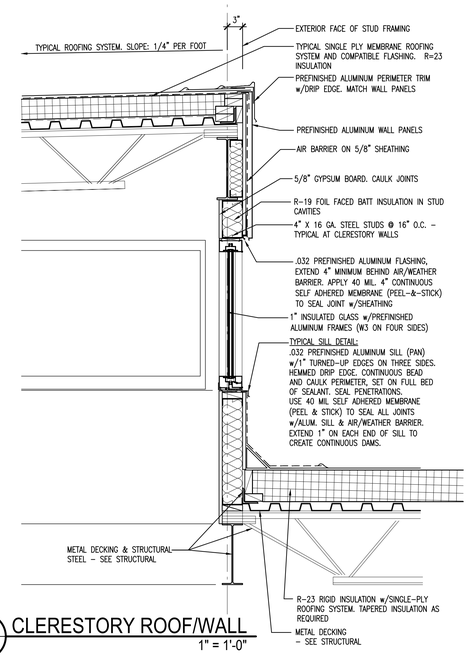

4 A6.1 CLERESTORY ROOF/WALL
1" = 1'-0"

TTA

ADDITIONS TO MAINTENANCE FACILITY

5201 NELSON ROAD (MAINTENANCE BLDG)
5210 NELSON ROAD (VACANT LOT)
CARY, NORTH CAROLINA

COMPLETE FACILITIES SOLUTIONS

MOSER MAYER PHOENIX ASSOCIATES, PA

328 E. Market Street
Suite 200
Greensboro, N.C. 27401
Telephone 336-373-9800
Fax 336-373-0077

CERT. NO. 4305
CERT. NO. 361

MULKEY ENGINEERS & CONSULTANTS
PO Box 33127
Raleigh, NC 27636
(919) 851-1912
(919) 851-1918 (FAX)
WWW.MULKEYINC.COM

THIS DRAWING IS THE PROPERTY OF MOSER MAYER PHOENIX ASSOCIATES, P.A. AND IS NOT TO BE COPIED OR REPRODUCED IN PART OR WHOLE WITHOUT PERMISSION.

RECORD DRAWING DISCLAIMER

TO THE BEST OF OUR KNOWLEDGE, THESE DRAWINGS HAVE BEEN REVISED TO REFLECT CHANGES MADE DURING THE CONSTRUCTION PROCESS, BASED UPON THE MARKED-UP DRAWINGS AND OTHER DATA FURNISHED TO THE ARCHITECT BY THE CONTRACTOR OR CONTRACTORS. THE ARCHITECT DOES NOT ASSURE THE ACCURACY OF THAT INFORMATION OR TAKE RESPONSIBILITY FOR ANY ERROR OR OMISSION INCORPORATED INTO THE DRAWINGS AS A RESULT. THE OWNER IS ADVISED TO OBTAIN INDEPENDENT VERIFICATION PRIOR TO USING THE INFORMATION CONTAINED HEREIN.

REVISIONS

NO.	DATE	DESCRIPTION
	01-26-08	RECORD DRAWINGS

DATE	APRIL 28, 2006
PROJECT NUMBER	05111.00 (05156.00)
SCALE	
DRAWN BY	

BUILDING SECTIONS & BUILDING DETAILS

A6.1

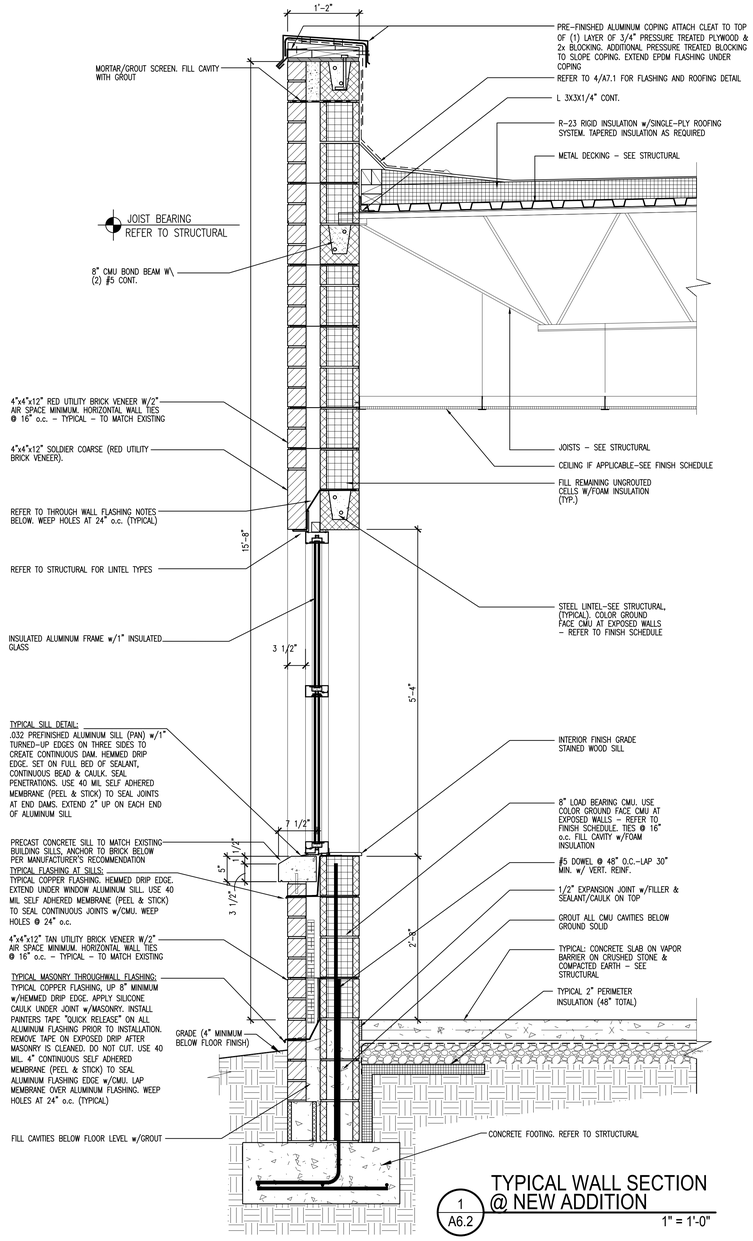

1 A6.2 TYPICAL WALL SECTION @ NEW ADDITION
1" = 1'-0"

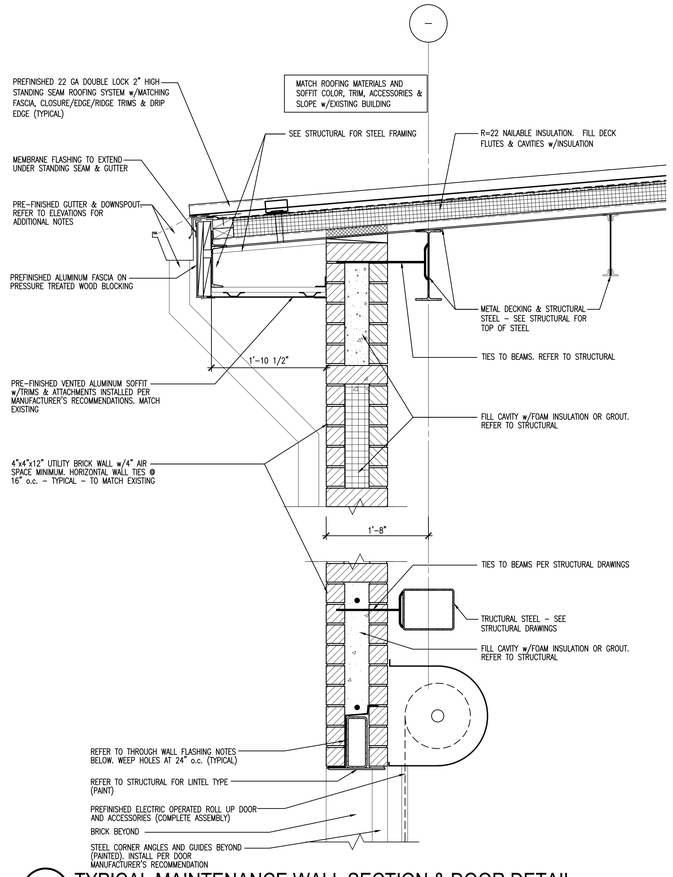

2 A6.2 TYPICAL MAINTENANCE WALL SECTION & DOOR DETAIL
1" = 1'-0"

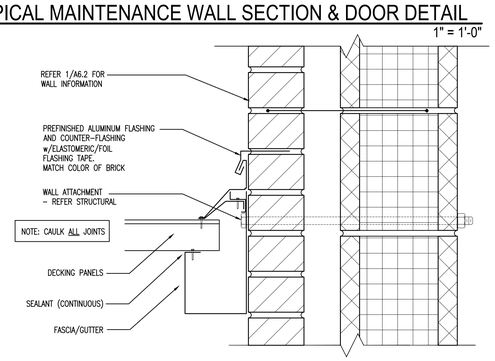

3 A6.2 FLASHING DETAIL AT PREFINISHED CANOPY
1 1/2" = 1'-0"

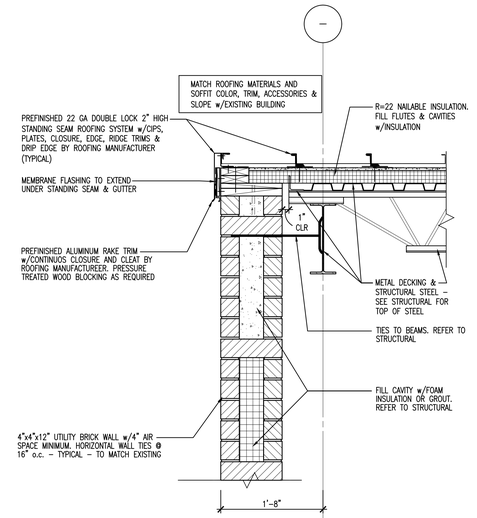

6 A6.2 TYPICAL RAKE DETAIL @ MAINTENANCE
1" = 1'-0"

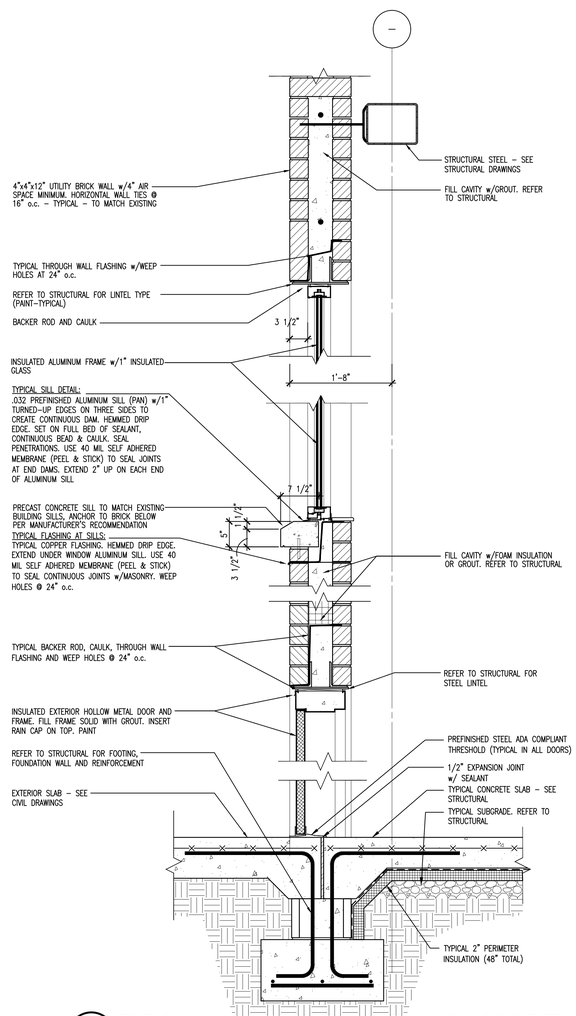

7 A6.2 TYPICAL MAINTENANCE WINDOW AND DOOR DETAILS
1" = 1'-0"

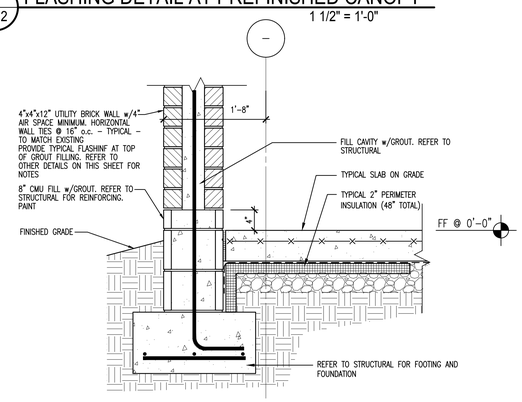

5 A6.2 TYPICAL MAINTENANCE WALL BASE DETAIL
1" = 1'-0"

NOTE:
SUPERIOR METAL PRODUCTS CO., INC PRODUCT WAS USED AS A GUIDELINE IN THE PREPARATION OF THE DRAWINGS. EACH MANUFACTURER MUST INCLUDE ALL COSTS FOR ANY SPECIALTY ITEM REQUIRED DUE TO THEIR SYSTEM INCLUDING ACCESS DOORS, ETC., IF REQUIRED.

4 A6.2 PREFABRICATED ALUMINUM CANOPY & COLUMN SYSTEM
NOT TO SCALE

TTA

ADDITIONS TO MAINTENANCE FACILITY

5201 NELSON ROAD (MAINTENANCE BLDG)
5210 NELSON ROAD (VACANT LOT)
CARY, NORTH CAROLINA

COMPLETE FACILITIES SOLUTIONS

MOSER MAYER PHOENIX ASSOCIATES, PA

328 E. Market Street
Suite 200
Greensboro, N.C. 27401
Telephone 336-373-9800
Fax 336-373-0077

DANIEL CHARLES MAYER JR. REGISTERED ARCHITECT CERT. NO. 4305 NORTH CAROLINA GREENSBORO, N.C.

MOSER MAYER PHOENIX ASSOCIATES P.A. REGISTERED STRUCTURAL ENGINEER CERT. NO. 361 NORTH CAROLINA GREENSBORO, N.C.

THIS DRAWING IS THE PROPERTY OF MOSER MAYER PHOENIX ASSOCIATES, P.A. AND IS NOT TO BE COPIED OR REPRODUCED IN PART OR WHOLE WITHOUT PERMISSION.

MULKEY ENGINEERS & CONSULTANTS
PO Box 33127
RALEIGH, N.C. 27636
(919) 851-1912
(919) 851-1918 (FAX)
WWW.MULKEYINC.COM

RECORD DRAWING DISCLAIMER

TO THE BEST OF OUR KNOWLEDGE, THESE DRAWINGS HAVE BEEN REVISED TO REFLECT CHANGES MADE DURING THE CONSTRUCTION PROCESS, BASED UPON THE MARKED-UP DRAWINGS AND OTHER DATA FURNISHED TO THE ARCHITECT BY THE CONTRACTOR OR CONTRACTORS. THE ARCHITECT DOES NOT ASSURE THE ACCURACY OF THAT INFORMATION OR TAKE RESPONSIBILITY FOR ANY ERROR OR OMISSION INCORPORATED INTO THE DRAWINGS AS A RESULT. THE OWNER IS ADVISED TO OBTAIN INDEPENDENT VERIFICATION PRIOR TO USING THE INFORMATION CONTAINED HEREIN.

REVISIONS

NO.	DATE	DESCRIPTION
	01-26-08	RECORD DRAWINGS

DATE	APRIL 28, 2006
PROJECT NUMBER	05111.00 (05156.00)
SCALE	
DRAWN BY	

BUILDING WALL AND CANOPY DETAILS

A6.2

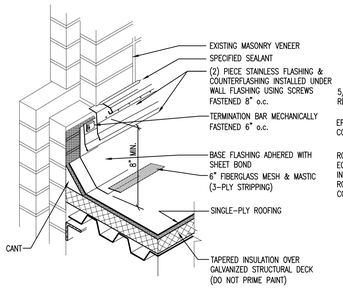

6 A7.1 COUNTER FLASHING DETAIL
NOT TO SCALE

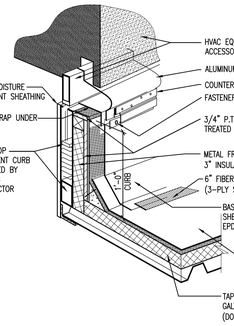

7 A7.1 FLASHING DETAIL AT EQUIPMENT CURBS
NOT TO SCALE

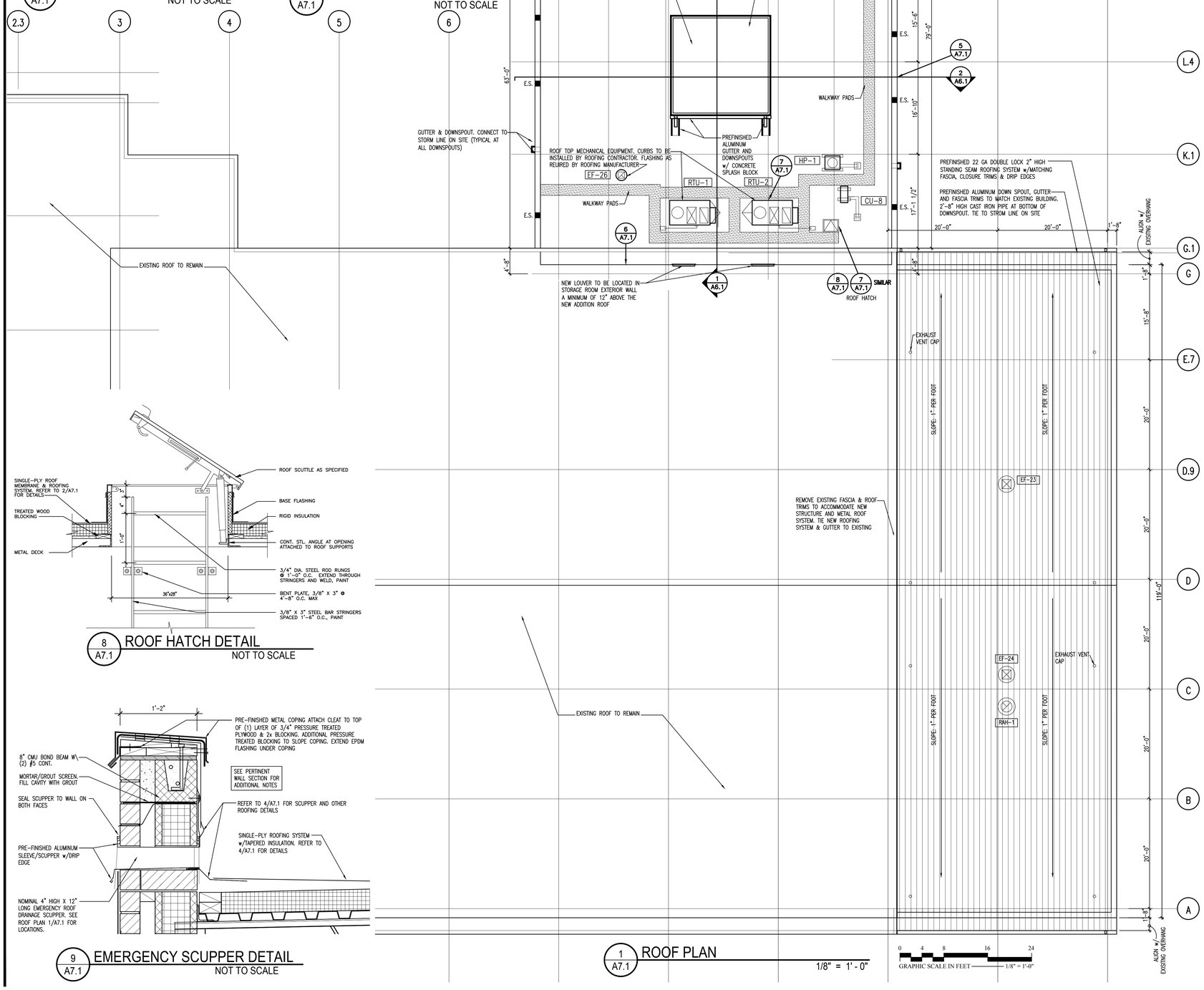

1 A7.1 ROOF PLAN
1/8" = 1' - 0"

8 A7.1 ROOF HATCH DETAIL
NOT TO SCALE

9 A7.1 EMERGENCY SCUPPER DETAIL
NOT TO SCALE

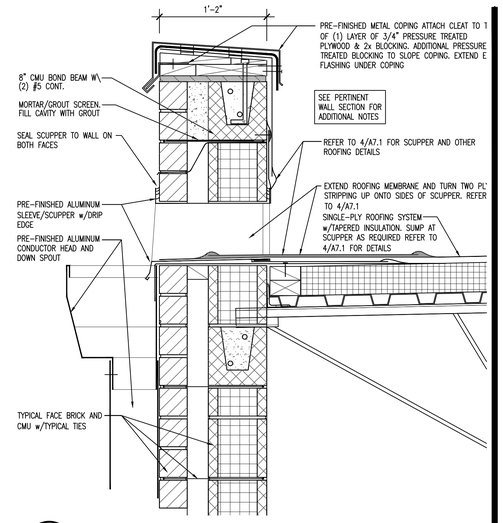

2 A7.1 TYPICAL SCUPPER
1-1/2" = 1'-0"

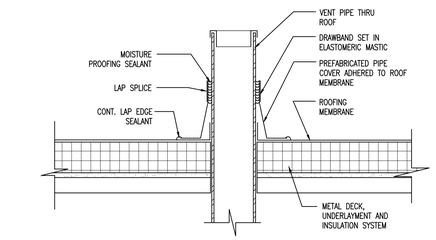

3 A7.1 TYPICAL PLUMBING VENT
1-1/2" -= 1'-0"

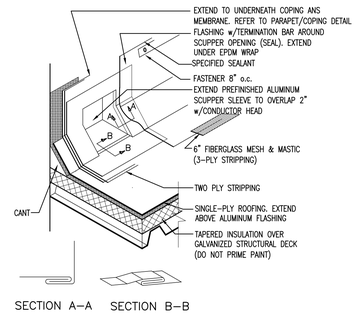

4 A7.1 TYPICAL FLASHING AT SCUPPER
NOT TO SCALE

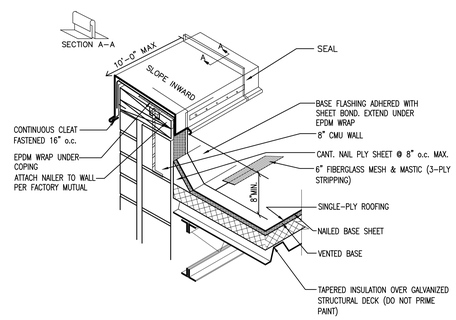

5 A7.1 TYPICAL PARAPET DETAIL
NOT TO SCALE

ADDITIONS TO MAINTENANCE FACILITY

5201 NELSON ROAD (MAINTENANCE BLDG)
5210 NELSON ROAD (VACANT LOT)
CARY, NORTH CAROLINA

COMPLETE FACILITIES SOLUTIONS

MOSER MAYER PHOENIX ASSOCIATES, PA
328 E. Market Street
Suite 200
Greensboro, N.C. 27401
Telephone 336-373-9800
Fax 336-373-0077

THIS DRAWING IS THE PROPERTY OF MOSER MAYER PHOENIX ASSOCIATES, P.A. AND IS NOT TO BE COPIED OR REPRODUCED IN PART OR WHOLE WITHOUT PERMISSION.

MULKEY ENGINEERS & CONSULTANTS
PO Box 33127
Raleigh, N.C. 27636
(919) 851-1912
(919) 851-1918 (FAX)
WWW.MULKEYINC.COM

RECORD DRAWING DISCLAIMER

TO THE BEST OF OUR KNOWLEDGE, THESE DRAWINGS HAVE BEEN REVISED TO REFLECT CHANGES MADE DURING THE CONSTRUCTION PROCESS, BASED UPON THE MARKED-UP DRAWINGS AND OTHER DATA FURNISHED TO THE ARCHITECT BY THE CONTRACTOR OR CONTRACTORS. THE ARCHITECT DOES NOT ASSURE THE ACCURACY OF THAT INFORMATION OR ASSUME RESPONSIBILITY FOR ANY ERROR OR OMISSION INCORPORATED INTO THE DRAWINGS AS A RESULT. THE OWNER IS ADVISED TO SEEK INDEPENDENT VERIFICATION PRIOR TO USING THE INFORMATION CONTAINED HEREIN.

REVISIONS

NO.	DATE	DESCRIPTION
	01-26-08	RECORD DRAWINGS

DATE	APRIL 28, 2006
PROJECT NUMBER	05111.00 (05156.00)
SCALE	
DRAWN BY	

ROOF PLAN AND DETAILS

A7.1

2 S1.1 SECTION AT CANOPY FOOTING

S118

NOT TO SCALE

PIER SCHEDULE		
MARK	PIER SIZE	REINFORCEMENT
P1	1'-8" X 1'-8"	(8) #5 VERT. AND #3 LATERAL TIES @ 12" O.C. w/ 8"X8"X12" BLOCKOUT FOR CANOPY COLUMN

FOUNDATION SCHEDULE		
MARK	FOOTING SIZE	REINFORCEMENT
F1	6'-0" X 6'-0" X 1'-6"	(8) #5 E.W.
F2	5'-0" X 5'-0" X 1'-3"	(6) #5 E.W.
F3	4'-0" X 4'-0" X 1'-0"	(6) #5 E.W.
F4	3'-0" X 3'-0" X 1'-0"	(5) #5 E.W.

NOTES:

1. FINISHED FLOOR ELEVATION IS 391.50'. FOR PURPOSES OF FOUNDATION PLAN ASSUME FINISHED FLOOR ELEVATION IS 0'-0"
2. CONCRETE SLAB SHALL BE 6" THICK, REINFORCED w/ 6X6 W2.9XW2.9 WWF ON 6" CLEAN GRAVEL AND 10 MIL REINFORCED VAPOR BARRIER.
3. ALL CMU CAVITIES BELOW GROUND SHALL BE GROUTED SOLID.
4. CONCRETE SLAB SHALL BE 4" THICK, REINFORCED w/ 6X6 W2.9XW2.9 WWF ON 4" CLEAN GRAVEL AND 10 MIL REINFORCED VAPOR BARRIER.
5. DOWEL TO EXISTING FOOTING w/ (3) #5 X 2'-6" BARS. DRILL 10" INTO EXISTING FOOTING, CLEAN HOLE, PLACE BAR AND EPOXY GROUT.

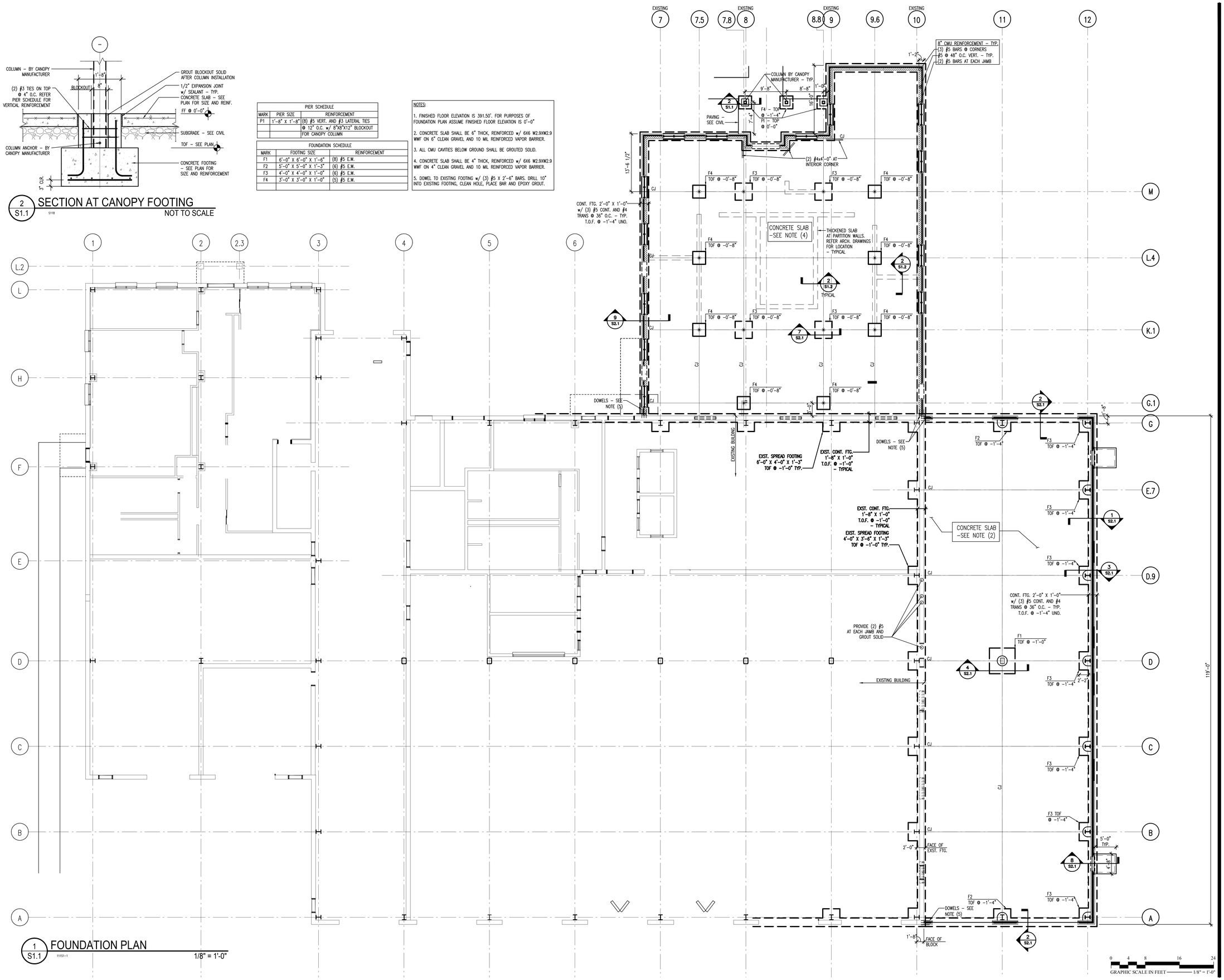

1 S1.1 FOUNDATION PLAN

11151-1

1/8" = 1'-0"

TTA

ADDITIONS TO MAINTENANCE FACILITY

5201 NELSON ROAD (MAINTENANCE BLDG)
5210 NELSON ROAD (VACANT LOT)
CARY, NORTH CAROLINA

COMPLETE FACILITIES SOLUTIONS

MOSER MAYER PHOENIX ASSOCIATES, PA

328 E. Market Street
Suite 200
Greensboro, N.C. 27401
Telephone 336-373-9800
Fax 336-373-0077

NORTH CAROLINA PROFESSIONAL SEAL 027680 ENGINEER PAUL H. BRECHNER

MOSER MAYER PHOENIX ASSOCIATES P.A. ENGINEERING COMPANY CERT. NO. C-784 NORTH CAROLINA GREENSBORO, N.C.

THIS DRAWING IS THE PROPERTY OF MOSER MAYER PHOENIX ASSOCIATES, P.A. AND IS NOT TO BE COPIED OR REPRODUCED IN PART OR WHOLE WITHOUT PERMISSION.

MULKEY ENGINEERS & CONSULTANTS
PO Box 33157
Raleigh, N.C. 27636
(919) 851-1912
(919) 851-1918 (FAX)
WWW.MULKEYINC.COM

RECORD DRAWING DISCLAIMER

TO THE BEST OF OUR KNOWLEDGE, THESE DRAWINGS HAVE BEEN REVISED TO REFLECT CHANGES MADE DURING THE CONSTRUCTION PROCESS, BASED UPON THE MARKED-UP DRAWINGS AND OTHER DATA FURNISHED TO THE ARCHITECT BY THE CONTRACTOR OR CONTRACTORS. THE ARCHITECT DOES NOT ASSURE THE ACCURACY OF THAT INFORMATION OR TAKE RESPONSIBILITY FOR ANY ERROR OR OMISSION INCORPORATED INTO THE DRAWINGS AS A RESULT. THE OWNER IS ADVISED TO OBTAIN INDEPENDENT VERIFICATION PRIOR TO USING THE INFORMATION CONTAINED HEREIN.

REVISIONS

NO.	DATE	DESCRIPTION
	01-26-08	RECORD DRAWINGS

DATE	APRIL 28, 2006
PROJECT NUMBER	05111.00 (05156.00)
SCALE	AS NOTED
DRAWN BY	BI

FOUNDATION PLAN

S1.1

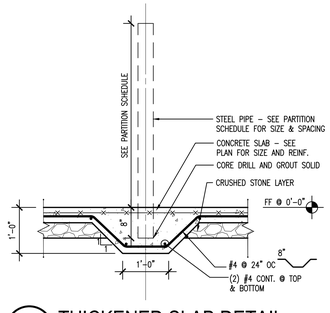

2 / S1.2 THICKENED SLAB DETAIL
3/4" = 1'-0"

LINTEL SCHEDULE		
MARK	LINTEL SIZE AND REINFORCEMENT	
L1	8" BOND BEAM w/ (2) #4 AT BOTTOM w/ L3-1/2 X 4 X 5/16" (LLV) AT VENEER	
L2	PROVIDE W8X13 w/ 3/8" THICK WEB	
	STIFFENERS @ 24" O.C. AND w/ 1/2X14" STEEL PLATE AT BOTTOM	
L3	(2) L5 X 3 1/2 X 5/16" (LLV) w/ CONT. STEEL PLATE 5/16" X 11" 1/4" FILLET WELD 3@9	
L4	HSS10X4X5/16" w/ CONT. STEEL PLATE 5/16" X 11". 1/4" FILLET WELD 3@9	
L5	PROVIDE W16X40 w/ 3/8" THICK WEB	
	STIFFENERS @ 24" O.C. AND 1/2" X 14"	
	CONTINUOUS STEEL PLATE AT BOTTOM. PROVIDE 1/2" DIA. X 6" STUD ANCHORS ON TOP OF	
	WIDE FLANGE. COORDINATE STUD SPACING w/ VERTICAL WALL REINFORING.	

NOTES:

1. ROOF DECK SHALL BE 1 1/2" X 20 GA. WIDE RIB (TYPE B) WITH A GAVANIZED FINISH. PROVIDE L 3X3X1/4" AT PERIMETER OF DECK – TYPICAL AT ALL ROOF EDGES UNO. PROVIDE L 4X4X1/4" AT ALL CONDENSING UNITS AND FANS. SEE ARCH. AND MECH.

2. HB – HORIZONTAL BRIDGING
DB – DIAGONAL BRIDGING
GENERAL CONTRACTOR TO COORDINATE WITH RTU PENETRATIONS.

3. EXTEND TOP CHORD OF JOIST GIRDER AT GRID LINES A AND G BY 3'-8".

4. PRIOR TO FABRICATION OF ANY STEEL CONTRACTOR TO VERIFY MECHANICAL EQUIPMENT AND ROOF HATCH LOCATION, SUPPORT AND REQUIRED PENETRATIONS.

5. ALL COLUMNS ALONG GRIDLINE 12 SHALL BE W14X43 w/ 1'-4" X 1'-0" X 1/2" BASE PLATE w/ (4) 3/4" DIA. X 1'-3" ANCHOR RODS. COLUMNS AT A/11 AND G/11 SHALL BE W14X90 w/ 1'-4" X 1'-0" X 1/2" BASE PLATE w/ (4) 3/4" DIA. X 1'-6" ANCHOR RODS. REFER 3/S2.1. COLUMN AT D/11 SHALL BE HSS16X12X1/2" w/ 2'-0" X 1'-0" X 1" BASE PLATE w/ (4) 1" DIA. X 1'-6" ANCHOR RODS. REFER 4/S2.1.

6. ALL COLUMNS ALONG GRID LINES G.1, K.1, L.4 AND M SHALL BE HSS4X4X3/8" w/ 8X8X1/2" BASE PLATE AND (4) 3/4" DIA. ANCHOR RODS.

7. COLUMNS AT ENTRY CANOPY ARE PART OF CANOPY TO BE DESIGNED BY CANOPY MANUFACTURER. NET UPLIFT ON CANOPY IS 17 PSF. GROUND SNOW AND DRIFT LOADS ON THE CANOPY ARE AS SHOWN BELOW:

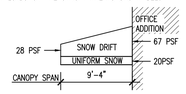

SECURE CANOPY EDGE TO BRICK AND CMU WALL WITH HILTI HY20 3/8" DIA. HIT-A ROD ANCHORS @ 30" O.C. MAX.

8. NET UPLIFT ON ROOF JOIST IS 10 PSF.

9. PROVIDE 1/2" DIA. SLEEVE ANCHORS AT 3'-0" O.C. INTO CMU.

1 / S1.2 FRAMING PLAN
1/8" = 1'-0"

ADDITIONS TO MAINTENANCE FACILITY

5201 NELSON ROAD (MAINTENANCE BLDG)
5210 NELSON ROAD (VACANT LOT)
CARY, NORTH CAROLINA

COMPLETE FACILITIES SOLUTIONS

MOSER MAYER PHOENIX ASSOCIATES, PA

328 E. Market Street
Suite 200
Greensboro, N.C. 27401
Telephone 336-373-9800
Fax 336-373-0077

NORTH CAROLINA PROFESSIONAL SEAL 027680 ENGINEER PAUL H. BRECHNER

MOSER MAYER PHOENIX ASSOCIATES P.A. ENGINEERING DESIGN FIRM CERT. NO. C-784 NORTH CAROLINA GREENSBORO, N.C.

THIS DRAWING IS THE PROPERTY OF MOSER MAYER PHOENIX ASSOCIATES, P.A. AND IS NOT TO BE COPIED OR REPRODUCED IN PART OR WHOLE WITHOUT PERMISSION.

MULKEY ENGINEERS & CONSULTANTS
PO Box 33127
Raleigh, N.C. 27636
(919) 851-1912
(919) 851-1918 (FAX)
WWW.MULKEYINC.COM

RECORD DRAWING DISCLAIMER

TO THE BEST OF OUR KNOWLEDGE, THESE DRAWINGS HAVE BEEN REVISED TO REFLECT CHANGES MADE DURING THE CONSTRUCTION PROCESS, BASED UPON THE MARKED-UP DRAWINGS AND OTHER DATA FURNISHED TO THE ARCHITECT BY THE CONTRACTOR OR CONTRACTORS. THE ARCHITECT DOES NOT ASSURE THE ACCURACY OF THAT INFORMATION OR TAKE RESPONSIBILITY FOR ANY ERROR OR OMISSION INCORPORATED INTO THE DRAWINGS AS A RESULT. THE OWNER IS ADVISED TO OBTAIN INDEPENDENT VERIFICATION PRIOR TO USING THE INFORMATION CONTAINED HEREIN.

REVISIONS

NO.	DATE	DESCRIPTION
	01-26-08	RECORD DRAWINGS

DATE	APRIL 28, 2006
PROJECT NUMBER	05111.00 (05156.00)
SCALE	AS NOTED
DRAWN BY	BI

ROOF FRAMING PLAN

S1.2

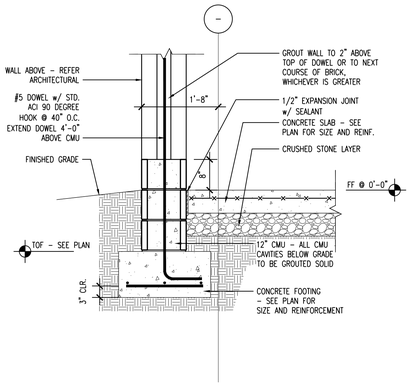

1 S2.1 EXTERIOR FOOTING
S101
3/4" = 1'-0"

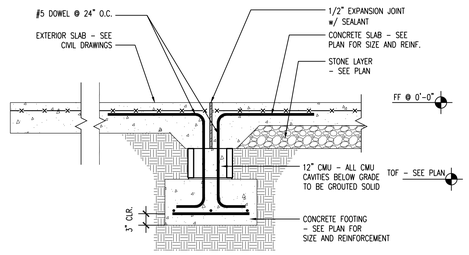

2 S2.1 CONDITION AT EXTERIOR SLAB
S102
3/4" = 1'-0"

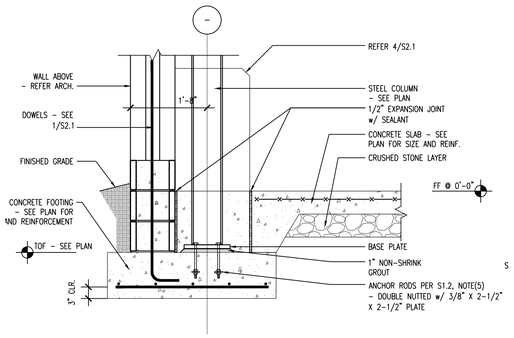

3 S2.1 EXTERIOR SPREAD FOOTING
S103
3/4" = 1'-0"

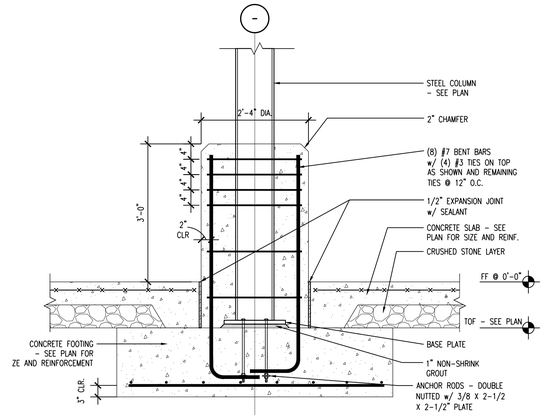

4 S2.1 TYPICAL INTERIOR FOOTING
S104
3/4" = 1'-0"

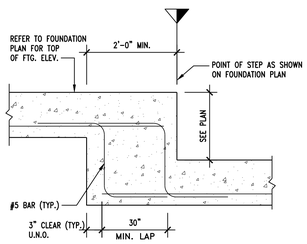

5 S2.1 STEPPED FOOTING DETAIL
03100-01
NOT TO SCALE

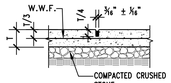

NOTES:
1. CONTROL JOINTS SHALL BE FORMED BY AN APPROVED TEMPORARY INSERT OR BY SAWING WITH AN APPROVED CONCRETE SAW.
2. SAWING SHALL BE DONE AS SOON AS POSSIBLE AFTER PLACING CONCRETE, WHEN CONCRETE HAS HARDENED SUFFICIENTLY TO ALLOW CUTTING (24 HOURS MAX.) WITHOUT DAMAGING CUT EDGES.

SLAB ON GRADE
CONTROL JOINT - CJ

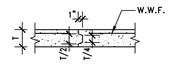

NOTES:
1. CONSTRUCTION JOINTS SHALL BE FORMED BY AN APPROVED TONGUE AND GROOVE FORM.
2. JOINT PROFILE SHALL BE 1" DEEP TRAPEZOID CENTERED IN SLAB.

SLAB ON GRADE
CONSTRUCTION JOINT - CJ

6 S2.1 SLAB JOINT DETAIL
03300-01
NOT TO SCALE

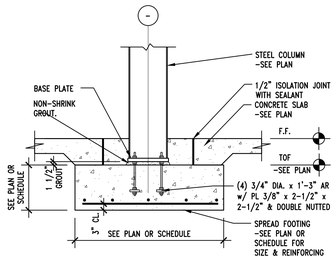

7 S2.1 INTERIOR FOOTING DETAIL
03100-03
NOT TO SCALE

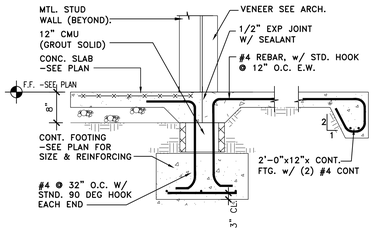

8 S2.1 STOOP DETAIL
03100-08
NOT TO SCALE

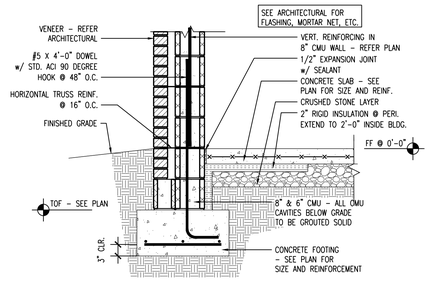

9 S2.1 EXTERIOR CONTINUOUS FOOTING
S117
NOT TO SCALE

TECHNICAL SPECIFICATIONS

I. GENERAL INFORMATION
A. ALL CONSTRUCTION SHALL CONFORM TO THE NORTH CAROLINA STANDARD BUILDING CODE, 2002 EDITION AND ASCE 7–98.
B. VERIFY ALL DIMENSIONS AND CONDITIONS IN THE FIELD PRIOR TO COMMENCING CONSTRUCTION.
C. ELEVATIONS GIVEN ON THE PLANS ARE TO TOP (UNLESS NOTED OTHERWISE) OF BEAMS, WALL, ETC. WITH RESPECT TO THE REFERENCE ELEVATION OF THE EXITING FINISHED FLOOR OF 0'-0".
D. FOUNDATION DESIGN BASED UPON THE GEOTECHNICAL REPORT PREPARED BY GEOTECHNOLOGIES, INC.,DATED OCTOBER 21, 2005. ALL GEOTECHNICAL WORK SHALL BE DONE IN ACCORDANCE WITH THE REQUIREMENTS AND RECOMMENDATIONS OF THIS REPORT.
E. DESIGN LOADS:
1. ROOF LIVE LOADS . . . . . 20 PSF
2. ALL BEARING FOR FOOTINGS . . . . . 3,000 PSF
3. BASIC WIND SPEED = 90 MPH STRUCTURAL CATECORY
EXPOSURE CATECORY C ENCLOSED BUILDING
IMPORTANCE FACTOR = 1.0
4. GROUND SNOW LOAD = 20 PSF
5. SEISMIC
SPECTRAL RESPONSE ACCELERATION Ss 22.5 %g
S1 10.5 %g
IMPORTANCE FACTOR = 1.0
SEISMIC USE GROUP: I
SEISMIC DESIGN CATECORY: C
SOIL CLASSIFICATION: B
SEISMIC RESISTING SYSTEM: STEEL FRAME (MAINTAINCE)
CMU SHEAR WALL (OFFICE)
ANALYSIS PROCEDURE UTILIZED: EQUIVALENT LATERAL FORCE

II. SPECIAL INSPECTIONS
SPECIAL INSPECTIONS REQUIREMENTS OF NC BUILDING CODE 2002, SECTION 1704 AS PROVIDED BY CONTRACTOR'S TESTING AGENCY.
A. BASED UPON THE SOILS REPORT THE FOLLOWING TESTS WILL BE CONDUCTED, PER SECTION 1704.7.
1. DETERMINE THAT THE SITE HAS BEEN PREPARED IN ACCORDANCE WITH THE SOILS REPORT PRIOR TO PLACEMENT OF FILL.
2. DURING PLACEMENT AND COMPACTION OF THE FILL MATERIAL, PERIODIC INSPECTION TO DETERMINE THAT THE FILL MATERIAL BEING USED AND THE MAXIMUM LIFT THICKNESS COMPLY WITH THE SOILS REPORT.
3. PERIODIC INSPECTION OF THE IN-PLACE DRY DENSITY OF THE COMPACTED FILL COMPLIES WITH THE SOILS REPORT.
B. INSPECTION OF CONCRETE CONSTRUCTION PER SECTION 1704.4 WILL BE AS FOLLOWS.
1. PERIODIC INSPECTION OF REINFORCING STEEL PLACEMENT. REFERENCED STANDARD IS ACI 318: 3.5, 7.1–7.7.
2. PERIODIC INSPECTION VERIFYING THE USE OF THE REQUIRED DESIGN MIX. REFERENCED STANDARD ACI 318: CHAPTERS 4, 5.2–5.4.
3. CONTINUOS INSPECTION OF READY-MIX CONCRETE AS DELIVERED TO THE JOBSITE INCLUDING SLUMP, TEMPERATURE AND AIR CONTENT TESTS AT THE TIME OF MAKING SPECIMENS OF STRENGTH TESTS. REFERENCED STANDARDS ARE ASTM C172, ASTM C31, ACI 318: 5.6,5.8.
4. THE TESTING OF CONCRETE TEST CYLINDER SPECIMENS FOR STRENGTH. SEE SECTION 03300 CAST-IN-PLACE CONCRETE FOR FREQUENCY OF TESTS.
5. CONTINUOUS INSPECTION OF CONCRETE PLACEMENT FOR PROPER APPLICATION TECHNIQUES. RELERENCED STANDARD ACI 318: 5.9, 5.10.
6. PERIODIC INSPECTION FOR MAINTENCE OF SPECIFIC CURING TEMPERATURE AND TECHNIQUES. REFERENCED STANDARD ACI 318: 5.11–5.13.
7. PERIODIC INSPECTION FOR VERIFICATION OF IN–SITU CONCRETE STRENGTH PRIOR TO REMOVAL OF SHORES AND FORMS FROM BEAMS AND STRUCTURAL SLABS. REFERENCED STANDARD ACI 318: 6.2.

C. INSPECTION OF STEEL CONSTRUCTION PER SECTION 1704.3 WILL BE AS FOLLOWS.
1. PERIODIC INSPECTION OF HIGH–STRENGTH BOLTS, NUTS AND WASHERS INCLUDING VERIFICATION OF BOLT SIZE AND TYPE AT START OF WORK AND DETERMINATION THAT ALL PLIES HAVE BEEN BROUGHT INTO SNUG CONTACT AT COMPLETION OF WORK. SEE SECTION 05120 STRUCTURAL STEEL FOR FREQUENCY OF TESTS.
2. VERIFICATION OF WELDER QUALIFICATIONS AT START OF WORK.
3. PERIODIC INSPECTION OF FIELD WELDS INCLUDING SINGLE–PASS FILLET WELDS LESS THEN 5/16 INCH, FLOOR AND DECK WELDS. REFERENCED STANDARD AWS D1.1 AND D1.3. SEE SECTION 05120 STRUCTURAL STEEL FOR FREQUENCY OF TESTS.
4. CONTINUOUS INSPECTION OF FIELD WELDS INCLUDING COMPLETE AND PARTIAL PENETRATION GROOVE WELDS, MUTI–PASS FILLET WELDS, AND SINGLE–PASS FILLET WELDS GREATER THEN 5/16 INCH. REFERENCED STANDARD AWS D1.1. SEE SECTION 05120 STRUCTURAL STEEL FOR FREQUENCY OF TESTS.
5. PERIODIC INSPECTION FOR COMPLIANCE WITH APPROVED CONSTRUCTION DOCUMENTS INCLUDING BRACING AND STIFFENING, MEMBER LOCATIONS AND JOINT DETAILS AT EACH CONNECTION.
D. INSPECTION OF MASONRY CONSTRUCTION PER SECTION 1704.5 WILL BE LEVEL 2 AS FOLLOWS.
1. FROM THE BEGINNING OF MASONRY CONSTRUCTION, THE FOLLOWING SHALL BE VERIFIED TO ENSURE COMPLIANCE.
a. PERIODIC INSPECTION FOR PROPORTIONS OF SITE–MIXED MORTAR AND GROUT. ACI530.1/ASCE 6/TMS 602 ARTICLE 2.6A.
b. PERIODIC INSPECTION DURING PLACEMENT OF MASONRY UNITS AND CONSTRUCTION OF MORTAR JOINTS. ACI530.1/ASCE 6/TMS 602 ARTICLE 3.3B, 3.4.
c. PERIODIC INSPECTION DURING PLACEMENT OF REINFORCING AND CONNECTORS. ACI530.1/ASCE 6/TMS 602 ARTICLE 3.2D.
d. CONTINOUS INSPECTION PRIOR TO GROUTING TO VERIFY GROUT SPACE. ACI530.1/ASCE 6/TMS 602 ARTICLE 3.5.
e. CONTINOUS INSPECTION DURING PLACEMENT OF GROUT. ACI530.1/ASCE 6/TMS 602 ARTICLE 3.3G.
2. PERIODIC INSPECTION TO VERIFY THE SIZE AND LOCATION OF STRUCTURAL ELEMENTS. ACI530.1/ASCE 6/TMS 602 ARTICLE 3.3G.
3. CONTINUOUS INSPECTION TO VERIFY TYPE, SIZE, AND LOCATION OF ANCHORS, INCLUDING OTHER DETAILS OF ANCHORAGE OF MASONRY TO STRUCTURAL MEMBERS, FRAMES OR OTHER CONSTRUCTION. REFERENCE STANDARD ACI 530/ASCE 5/TMS 402 SECTION 1.15.4, 2.12.
4. PERIODIC INSPECTION TO VERIFY THE SIZE, GRADE AND TYPE OF REINFORCEMENT. ACI530.1/ASCE 6/TMS 602 ARTICLE 2.4, 3.4.
5. PERIODIC INSPECTION TO VERIFY THAT PROTECTION OF MASONRY DURING COLD WEATHER (TEMPERATURE BELOW 40 DEG F.) OR HOT WEATHER (TEMPERATURE ABOVE 90 DEG F.). ACI530.1/ASCE 6/TMS 602 ARTICLE 1.8.
E. ALL OTHER CATECORIES OF SPECIAL INSPECTION ARE NOT APPLICABLE OR NOT REQUIRED.

III. QUALITY ASSURANCE PLAN
QUALITY ASSURANCE PLAN FOR SEISMIC RESISTANCE PER NC BUILDING CODE 2002, SECTION 1705 IS AS FOLLOWS.
A. THE DESIGNATED SEISMIC SYSTEM IS STEEL FRAME AND CMU SHEAR WALL WITH THE FOLLOWING ADDITIONAL SYSTEMS REQUIRED BY THIS PLAN ARE:
1. HVAC DUCTWORK CONTAINING HAZARDOUS MATERIALS, AND ANCHORAGE OF SUCH DUCTWORK.
2. PIPING SYSTEMS AND MECHANICAL UNITS CONTAINING FLAMMABLE, COMBUSTIBLE OR HIGHLY TOXIC MATERIALS.
3. ANCHORAGE OF ELECTRICAL EQUIPMENT USED FOR EMERCENCY OR STANDBY POWER SYSTEMS.

B. THE SPECIAL INSPECTION REQUIRED INCLUDING APPLICABLE REFERNCE STANDARDS, TYPE AND FREQUENCY IS COVERED BY THE SPECIAL INSPECTION ITEM II ABOVE.

IV. CONCRETE
A. MATERIALS
1. CONCRETE
TYPE I CEMENT
MINIMUM 28–DAY COMPRESSIVE STRENGTH . . . . . 4,000 PSI
AIR CONTENT . . . . . 5 TO 7 PERCENT
SLUMP . . . . . 2 TO 4 INCH
2. REINFORCING STEEL SHALL BE ASTM A615, GRADE 60
3. WELDED WIRE FABRIC ASTM A185
B. CONSTRUCTION
1. CONCRETE SHALL BE READY MIX, MIXED AND DELIVERED IN ACCORDANCE WITH ASTM C–94.
2. HOT WEATHER REQUIREMENTS SHALL COMPLY WITH ACI 305 AND COLD WEATHER REQUIREMENTS SHALL COMPLY WITH ACI 306.
3. FORMWORK SHALL BE IN ACCORDANCE WITH ACI 347.
4. REINFORCEMENT SHALL BE PLACED IN ACCORDANCE WITH CRSI MANUAL OF STANDARD PRACTICE.
5. CONCRETE SHALL BE PLACED IN ACCORDANCE WITH ACI 318, CHAPTER 5.
6. ALL REINFORCING STEEL AND WELDED WIRE FABRIC SHALL BE SUPPORTED ON CHAIRS.

V. STRUCTURAL STEEL
A. ALL DESIGN, DETAILING, FABRICATION AND ERECTION SHALL BE IN ACCORDANCE WITH THE LATEST EDITION OF THE AMERICAN INSTITUTE OF STEEL CONSTRUCTION (AISC) MANUAL OF STEEL CONSTRUCTION. ANY LOADS SHOWN ARE UNFACTORED FOR USE WITH ALLOWABLE STRESS DESIGN METHODS.
B. MATERIALS
1. STRUCTURAL STEEL WIDE FLANGE SHAPES SHALL CONFORM TO ASTM A992 (FY=50KSI).
2. STRUCTURAL STEEL ANGLES, CHANNELS AND PLATES SHALL CONFORM TO ASTM A36. (FY=36KSI)
3. STRUCTURAL STEEL HSS SHAPES SHALL CONFORM TO ASTM A500, GRADE B (FY=46KSI).
4. STRUCTURAL BOLTS SHALL BE 3/4–INCH DIAMETER MINIMUMN AND CONFORM TO ASTM A325, NUTS TO ASTM A563, AND WASHERS TO ASTM F436.
5. ANCHOR RODS SHALL CONFORM TO ASTM F1554, GRADE 55.
6. WELDING ELECTRODES SHALL BE E70XX AND WELDS 1/4 INCH MIN.
7. OPEN WEB STEEL JOISTS SHALL BE MANUFACTURED IN ACCORDANCE WITH THE STANDARDS OF THE STEEL JOIST INSTIUTE AND SHALL CONFORM TO THE REQUIREMENTS OF THE AISC STANDARD SPECIFICATIONS FOR OPEN WEB STEEL JOISTS, K SERIES.
8. ALL DECKING SHALL BE GALVANIZED UNLESS NOTED OTHERWISE. UNLESS NOTED OTHER WISE A CONTINUOUS WELDED 3x3x1/4 ANGLE SHALL BE INSTALLED ALONG THE ENTIRE PERIMETER OF ALL ROOF AND FLOOR DECK PLANES. THE ANGLE SHALL BE WELDED TO THE SUPPORTING STEEL FRAMING WITH AN INTERMITTENT 1/4–INCH FILLET WELD OF 3–INCHES EVERY 12–INCHES. THE DECKING SHALL BE FUSION WELDED TO THE CONTINUOUS ANGLE AS SPECIFIED UNDER EACH DECKING TYPE.
1 1/2" ROOF DECK SHALL BE GALVANIZED DECK TYPE 1.5B22 (FROM VULCRAFT) FASTENED AT JOIST AND PERIMETER ANGLE SUPPORTS WITH 5/8–INCH PUDDLE WELDS FOR 36/7 PATTERN AND USE (2) #10 TEK SIDE LAP SCREWS. FUSION WELDS SHALL BE MADE USING AWS E–6022 WELDING RODS. INSTALL DECK PANELS AND ACCESSORIES ACCORDING TO APPLICABLE SPECIFICATIONS AND COMMENTARY OF SDI PUBLICATION NO. 28.
C. FABRICATION OF STRUCTURAL STEEL
STRUCTURAL STEEL FABRICATION SHALL BE ACCOMPLISHED IN ACCORDANCE WITH THE APPLICABLE PROVISIONS OF THE LATEST AISC SPECIFICATIONS, AND WELDING SHALL BE IN ACCORDANCE WITH THE LATEST AWS CODE D1.1. ALL MEMBERS WILL BE FABRICATED TO ACCOMMODATE THE CONNECTIONS DETAILED ON THE DRAWINGS. ALL CONNECTIONS NOT OTHERWISE DETAILED OR NOTED SHALL BE FABRICATED AND ERECTED AS A STANDARD CONNECTION IN ACCORDANCE WITH THOSE SHOWN IN THE LATEST EDITION OF THE AISC MANUAL OF STEEL CONSTRUCTION.
D. SHOP FINISH OF STRUCTURAL STEEL
ALL STRUCTURAL STEEL WILL HAVE ONE SHOP PRIME COATS OF PAINT APPLIED PRIOR TO DELIVERY TO THE JOB SITE. PAINT SHALL BE FABRICATORS STANDARD RUST INHIBITIVE PRIMER. ALL AREAS OF STRUCTURAL STEEL MEMBERS IN WHICH THE PRIMED SURFACE IS DAMAGED DURING CONSTRUCTION SHALL BE TOUCHED UP WITH LIKE PRIMING MATERIAL.
E. OPEN WEB STEEL JOISTS
1. PROVIDE LATERAL ANCHORS AT EACH END OF EACH ROW OF BRIDGING TOP AND BOTTOM.
2. ALL JOISTS BEARING ON CONCRETE OR MASONRY SHALL HAVE A BEARING PLATE 3/8 INCH THICK X 4" WIDE X 6" LONG WITH (2) 6" LONG HEADED ANCHORS CAST INTO THE TOPS OF THE WALLS.
3. ALL JOISTS BEARING ON STEEL SHALL BE WELDED.
4. JOISTS AT EXPANSION JOINTS SHALL HAVE SLOTTED HOLES IN THE BEARING PLATES, TO PERMIT LONGITUDINAL MOVEMENT AND PREVENT LATERAL MOVEMENT.

VI. MASONRY
A. MATERIALS
1. ALL CONCRETE BLOCK SHALL BE NORMAL WEIGHT HOLLOW LOAD BEARING UNITS CONFORMING WITH ASTM C90 AND HAVE SAND AND GRAVEL AGGREGATE WITH AN Fm = 2000 PSI NET AREA.
2. REINFORCE JOINTS ON 16–INCH CENTERS WITH ASTM A82 GALVANIZED STANDARD DUR–O–WAL TRUSSED REINFORCEMENT OF PROPER WIDTH FOR THE THICKNESS OF THE WALL. INSTALL IN ACCORDANCE WITH THE MANUFACTURER@S PRINTED RECOMMENDATIONS. ALL DUR–O–WALL SHALL BE CONTINUOUS WITHOUT INTERRUPTION. USE SPECIAL CORNER AND JUNCTION UNITS.
3. MORTAR SHALL COMPLY WITH ASTM C270 AND SHALL BE TYPE S. ALL PORTLAND CEMENT SHALL BE TYPE I OR TYPE III, ASTM C150. ALL LIME SHALL BE SPECIAL HYDRATED LIME TYPE S. SAND SHALL COMPLY WITH ASTM C144.
4. GROUT FOR BOND BEAMS AND FILLED CELLS SHALL BE PEA GRAVEL AGGREGRATE CONCRETE HAVING A 28–DAY COMPRESSIVE STRENGTH OF 3000 PSI MIXED IN ACCORDANCE WITH ACI 318. THE SLUMP SHALL BE BETWEEN 9 AND 11–INCHES.
B. CONSTRUCTION
1. MASONRY SHALL COMPLY WITH ACI 530/ASCE 5 BUILDING CODE REQUIREMENTS FOR MASONRY STRUCTURES.
2. REINFORCING IN THE WALLS SHALL BE ASTM 615 GRADE 60. UNO ALL WALLS SHALL BE REINFORCED AS FOLLOWS:
WALLS #5 REBARS AT 48 INCHES ON CENTER
OPENINGS (2) CELLS ON EACH SIDE OF THE OPENING SHALL BE REINFORCED WITH #5.
CORNERS–CORNER CELL AND THE ADJACENT CELL EACH SIDE OF THE CORNER SHALL BE REINFORCED WITH #5.
3. ALL CONCRETE BLOCK MASONRY UNITS SHALL BE LAID IN STRAIGHT RUNNING BOND.
4. SPLICES FOR REINFORCING SHALL BE AS FOLLOWS:

BAR SIZE	SPLICE (INCHES)
#4	25
#5	34
#6	51

5. ALL EXPOSED JOINTS IN MASONRY WALLS SHALL BE TOOLED TO A DENSE CONCAVE SURFACE WHEN THUMBPRINT HARD.
6. DOWEL ALL MASONRY TO FOOTINGS OR SLABS WITH STANDARD 90–DEGREE HOOKS AND DOWELED 7–INCHES INTO BOND BEAMS AT TOP OF WALLS.
7. INSTALL VERTICAL CONTROL JOINTS AT NOT GREATER THAN 25–FOOT ON–CENTER U.N.O.
8. ALL MASONRY UNITS SHALL BE PLUMB, TRUE LEVEL, AND ACCURATELY SPACED WITH HEAD AND BED JOINTS FULL AND UNFORROWED.
9. ALL CUTS IN EXPOSED FACES OF CONCRETE BLOCK SHALL BE BY A MASONRY SAW.
10. CONTRACTOR SHALL USE THE LOW–LIFT GROUTING TECHNIQUE. MAXIMUM GROUTED HEIGHT SHALL BE FOUR (4) FEET, PLACED BY PUMPING AND VIBRATED DURING PLACEMENT. TERMINATE GROUT PLACEMENT 1–1/2 INCHES BELOW THE TOP OF A COURSE.
11. CONTRACTOR IS RESPONSIBLE FOR PROVIDING NECESSARY SHORING AND BRACING TO MAINTAIN WALL SHAPE, LINE AND DIMENSIONS IN CONFORMANCE WITH PLANS, AGAINST WIND AND CONTRUCTION LOADS.
12. SUPPORT AND SECURE VERTICAL REINFORCING AGAINST DISPLACEMENT. VETICAL REINFORCING STEEL SHALL HAVE A MINIMUM CLEARANCE OF 1/4 INCH FROM THE MASONRY, AND NOT LESS THAN ONE BAR DIAMETER BETWEEN BARS. MASONRY LAP SPLICES SHALL BE 48 BAR DIAMETERS (U.N.O).
13. PRIOR TO GROUTING, REMOVE DUST, DIRT, MORTAR DROPPINGS, LOOSE PIECES OF MASONRY AND OTHER FOREIGN MATERIALS FROM GROUT SPACES AND CLEAN TOP SURFACE OF STRUCTURAL MEMBERS SUPPORTING MASONRY. CLOSE CLEANOUT HOLES AND BRACE CLOSURE TO RESIST GROUT PRESSURES.
14. PROTECT MASONRY AGAINST FREEZING WHEN THE TEMPERATURE OF THE SURROUNDING AIR IS 40 DEGREES F AND FALLING. COMPLY WITH THE NATIONAL CONCRETE MASONRY ASSOCIATION (NCMA) TEK BULLETIN 16 @ COLD WEATHER CONCRETE MASONRY CONSTRUCTION.
15. PROVIDE LINTELS OVER ALL OPENINGS AND RECESSES IN MASONRY WALLS.
16. FOR ALL OPENINGS NOT OTHERWISE DETAILED OR SCHEDULED, MINIMUM LINTELS SHALL BE FOR EACH 4 INCH MASONRY WIDTH:
1–L 3–1/2 X 3–1/2 X 5/16 FOR SPANS UP TO 4–FEET.
1–L 4 X 3–1/2 X 5/16 FOR SPANS UP TO 6–FEET.
1–L 5 X 3–1/2 X 5/16 FOR SPANS UP TO 8–FEET.
FOR SPANS LESS THAN 2–FEET PROVIDE 5/16 PLATE.
17. ALL LINTELS SHALL HAVE A MINIMUM BEARING OF 8 INCHES AT EACH END.
18. ALL LINTELS THAT ARE BACK–TO–BACK SHALL BE WELDED TOP AND BOTTOM.

TTA

ADDITIONS TO MAINTENANCE FACILITY

5201 NELSON ROAD (MAINTENANCE BLDG)
5210 NELSON ROAD (VACANT LOT)
CARY, NORTH CAROLINA

COMPLETE FACILITIES SOLUTIONS
MOSER MAYER PHOENIX ASSOCIATES, PA
328 E. Market Street
Suite 200
Greensboro, N.C. 27401
Telephone 336-373-9800
Fax 336-373-0077

NORTH CAROLINA PROFESSIONAL SEAL 027680 ENGINEER PAUL H. BRECHNER

MOSER MAYER PHOENIX ASSOCIATES, P.A. CERT. NO. C-784 NORTH CAROLINA GREENSBORO, N.C.

THIS DRAWING IS THE PROPERTY OF MOSER MAYER PHOENIX ASSOCIATES, P.A. AND IS NOT TO BE COPIED OR REPRODUCED IN PART OR WHOLE WITHOUT PERMISSION.

MULKEY ENGINEERS & CONSULTANTS
PO Box 33127
Raleigh, N.C. 27636
(919) 851-1912
(919) 851-1918 (FAX)
WWW.MULKEYINC.COM

RECORD DRAWING DISCLAIMER

TO THE BEST OF OUR KNOWLEDGE, THESE DRAWINGS HAVE BEEN REVISED TO REFLECT CHANGES MADE DURING THE CONSTRUCTION PROCESS, BASED UPON THE MARKED-UP DRAWINGS AND OTHER DATA FURNISHED TO THE ARCHITECT BY THE CONTRACTOR OR CONTRACTORS. THE ARCHITECT DOES NOT ASSURE THE ACCURACY OF THAT INFORMATION OR TAKE RESPONSIBILITY FOR ANY ERROR OR OMISSION INCORPORATED INTO THE DRAWINGS AS A RESULT. THE OWNER IS ADVISED TO OBTAIN INDEPENDENT VERIFICATION PRIOR TO USING THE INFORMATION CONTAINED HEREIN.

REVISIONS

NO.	DATE	DESCRIPTION
	01-26-08	RECORD DRAWINGS

DATE	APRIL 28, 2006
PROJECT NUMBER	05111.00 (05156.00)
SCALE	AS NOTED
DRAWN BY	BI

DETAILS AND NOTES

S2.1

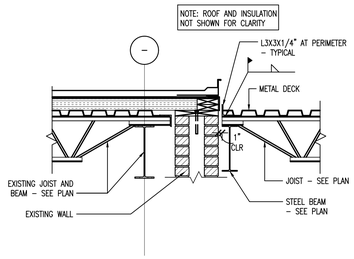

1 S2.2 ROOF FRAMING AT EXISTING
S106 3/4" = 1'-0"

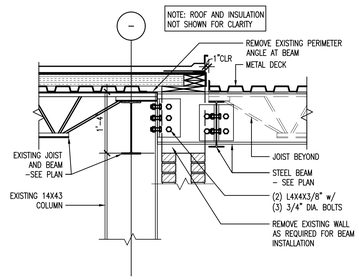

2 S2.2 FRAMING CONNECTION w/ EXISTING COLUMN
S108 3/4" = 1'-0"

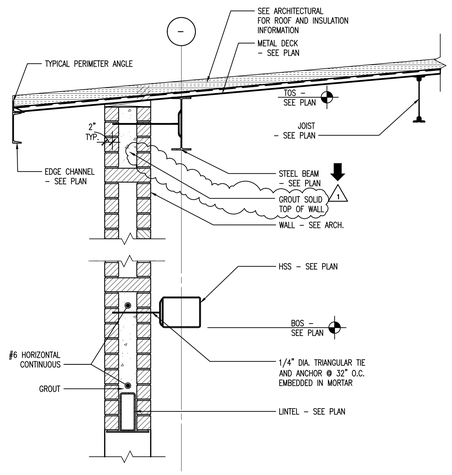

3 S2.2 END FRAMING DETAIL
S109 3/4" = 1'-0"

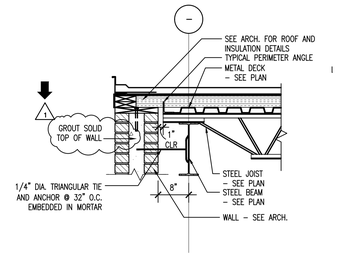

4 S2.2 FRAMING AT EXTERIOR WALL
S105 3/4" = 1'-0"

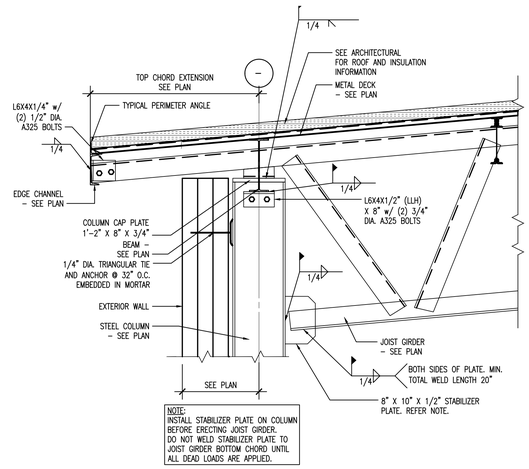

5 S2.2 JOIST GIRDER END CONNECTION
S110 NOT TO SCALE

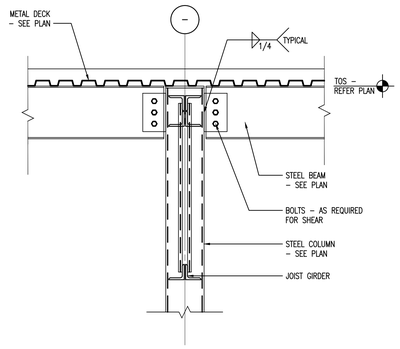

6 S2.2 BEAM- TUBE COLUMN CONNECTION
S107 NOT TO SCALE

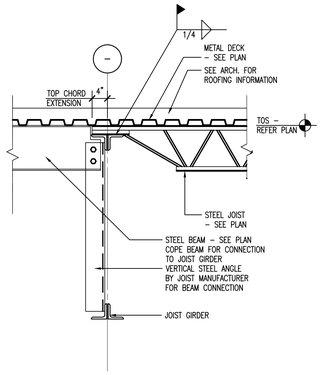

7 S2.2 BEAM CONNECTION AT GIDER TC
S111 NOT TO SCALE

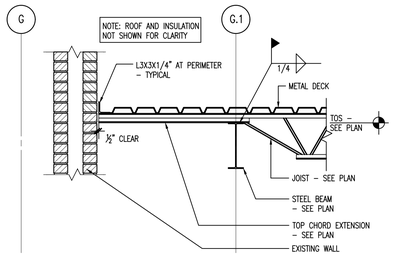

8 S2.2 ROOF SECTION AT EXISTING STRUCTURE
S112 NOT TO SCALE

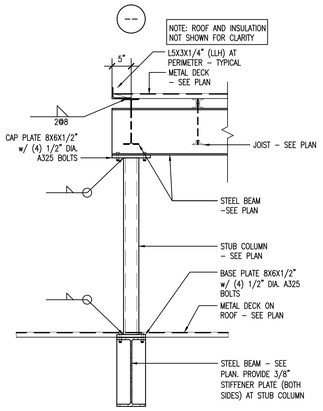

9 S2.2 SECTION AT CLEARSTORY
S113 NOT TO SCALE

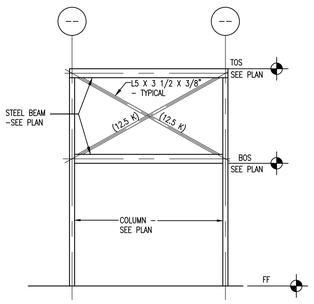

10 S2.2 X-=BRACING TYPE "A"
S114 NOT TO SCALE

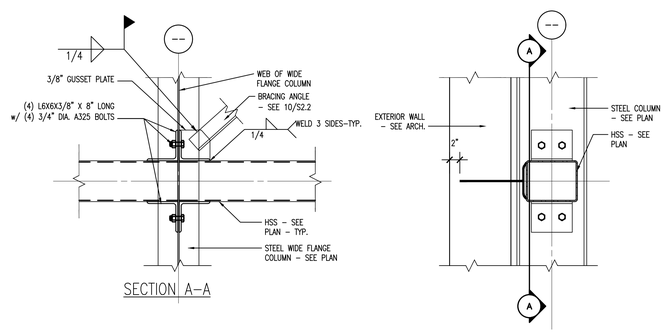

11 S2.2 MOMENT CONNECTION DETAIL
S115 NOT TO SCALE

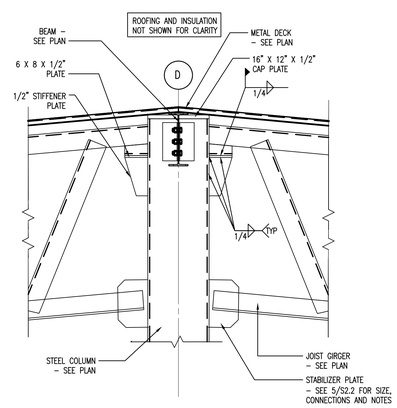

12 S2.2 JOIST GIRDER CONNECTION DETAIL
S116 NOT TO SCALE

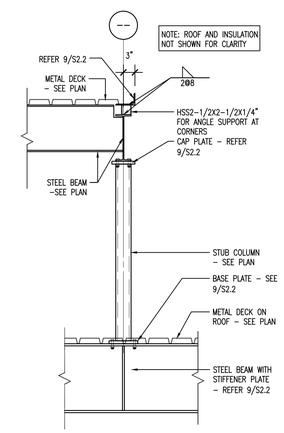

13 S2.2 SECTION AT CLEARSTORY
S119 NOT TO SCALE

TTA

ADDITIONS TO MAINTENANCE FACILITY

5201 NELSON ROAD (MAINTENANCE BLDG)
5210 NELSON ROAD (VACANT LOT)
CARY, NORTH CAROLINA

COMPLETE FACILITIES SOLUTIONS

MOSER MAYER PHOENIX ASSOCIATES, PA
328 E. Market Street
Suite 200
Greensboro, N.C. 27401
Telephone 336-373-9800
Fax 336-373-0077

NORTH CAROLINA PROFESSIONAL SEAL 027680 ENGINEER PAUL H. BRECKNER

MOSER MAYER PHOENIX ASSOCIATES, P.A. CERT. NO. C-784 GREENSBORO, N.C.

THIS DRAWING IS THE PROPERTY OF MOSER MAYER PHOENIX ASSOCIATES, P.A. AND IS NOT TO BE COPIED OR REPRODUCED IN PART OR WHOLE WITHOUT PERMISSION.

MULKEY ENGINEERS & CONSULTANTS
PO BOX 33127
RALEIGH, N.C. 27636
(919) 851-1912
(919) 851-1918 (FAX)
WWW.MULKEYINC.COM

RECORD DRAWING DISCLAIMER

TO THE BEST OF OUR KNOWLEDGE, THESE DRAWINGS HAVE BEEN REVISED TO REFLECT CHANGES MADE DURING THE CONSTRUCTION PROCESS, BASED UPON THE MARKED-UP DRAWINGS AND OTHER DATA FURNISHED TO THE ARCHITECT BY THE CONTRACTOR OR CONTRACTORS. THE ARCHITECT DOES NOT ASSURE THE ACCURACY OF THAT INFORMATION OR TAKE RESPONSIBILITY FOR ANY ERROR OR OMISSION INCORPORATED INTO THE DRAWINGS AS A RESULT. THE OWNER IS ADVISED TO OBTAIN INDEPENDENT VERIFICATION PRIOR TO USING THE INFORMATION CONTAINED HEREIN.

REVISIONS

NO.	DATE	DESCRIPTION
	01-26-08	RECORD DRAWINGS

DATE	APRIL 28, 2006
PROJECT NUMBER	05111.00 (05156.00)
SCALE	AS NOTED
DRAWN BY	BI

DETAILS AND NOTES

S2.2

GENERAL NOTES

1. SPRINKLER PIPING IS SIZED BY HYDRAULIC CALCULATIONS USING THE CRITERIA NOTED ON THE REMOTE AREAS SHOWN ON SHEET F1.1.

2. FIRE HYDRANT FLOW TEST DATA: DATE OF TEST 12-20-2005
LOCATION – 5201 NELSON ROAD, TOWN OF CARY, N.C.
STATIC PRESSURE – 95 PSI
RESIDUAL PRESSURE – 68 PSI
FLOW GALLONS PER MINUTE – 1174 GPM

3. THE AUTOMATIC SPRINKLERS, PIPING AND EQUIPMENT INDICATED ON THE DRAWINGS ARE SCHEMATIC AND ACTUAL LOCATIONS OF ALL COMPONENTS SHALL BE COORDINATED WITH OTHER BUILDING SYSTEMS PROVIDED BY OTHER SUBCONTRACTORS. DRAWINGS DO NOT CONSTITUTE ALL COMPONENTS OF A COMPLETE AUTOMATIC SPRINKLER SYSTEM. THE CONTRACTOR SHALL PROVIDE COMPLETE AUTOMATIC SPRINKLER COVERAGE THROUGHOUT THIS AREA INCLUDING ALL NECESSARY EQUIPMENT.

4. SYSTEM SHALL BE INSTALLED IN ACCORDANCE WITH APPLICABLE PROVISIONS OF NFPA 13 LATEST EDITION.

5. PROVIDE ALL NECESSARY SPRINKLER DRAINS, AUXILIARY DRAINS, BALL DRIPS, DRAIN VALVES ETC. FOR A COMPLETE WET PIPE SYSTEM.

6. PROVIDE TAMPER SWITCHES ON ALL CONTROL VALVES SHOWN ON DRAWINGS.

7. INSTALL SPRINKLER HEADS IN CENTER OF LAY-IN CEILING TILES. HEADS LOCATED IN GYPSUM BOARD OR OTHER CEILINGS SHALL BE LOCATED IN LINE WITH ELEMENTS (I.E. DIFFUSERS, ETC.) AND IN A SYMMETRICAL MANNER AS SHOWN ON PLANS.

8. PROVIDE INSPECTOR'S TEST CONNECTION AND DRAIN AS SHOWN ON DRAWINGS.

9. BENDS, TEES, PLUGS AND HYDRANTS ON PIPE LINES SHALL BE ANCHORED BY FM/FC APPROVED DEVICES, RODS AND CLAMPS, OR THRUST BLOCKS AS REQUIRED.

10. ALL PIPE ELEVATION DIMENSIONS AND FITTINGS ARE SHOWN FOR FOR HYDRAULIC CALCULATION PURPOSES ONLY. CONTRACTOR SHALL COORDINATE ACTUAL ELEVATIONS WITH OTHER TRADES AND MAKE ALL NECESSARY OFFSETS AROUND OBSTRUCTIONS AS REQUIRED BEFORE THE FABRICATION OF SPRINKLER PIPE.

11. THE SPRINKLER CONTRACTOR SHALL COORDINATE THEIR SHOP DRAWINGS WITH THE STRUCTURAL, PLUMBING, MECHANICAL AND ELECTRICAL CONTRACTORS TO ESTABLISH ACTUAL PIPE ELEVATIONS BETWEEN THE RESPECTIVE TRADES BEFORE PIPE FABRICATION.

12. SEE SPEC. SECTION 13910 FOR TYPES OF SPRINKLER PIPE ACCEPTABLE.

SPRINKLER SYMBOL SCHEDULE	
	SPRINKLER RISER
	SPRINKLER MAIN
	SPRINKLER BRANCH
	EXISTING SPRINKLER BRANCH
	EXISTING SPRINKLER BRANCH REMOVED
	PENDANT HEAD TYPE 1
	EXPOSED UPRIGHT HEAD TYPE 2
	EXISTING PENDANT SPRINKLER HEAD
	EXISTING UPRIGHT SPRINKLER HEAD
	CONTROL VALVE
	TYPICAL DROPS
	TYPICAL DROPS
100 9	TYPICAL REMOTE OR NODE POINTS

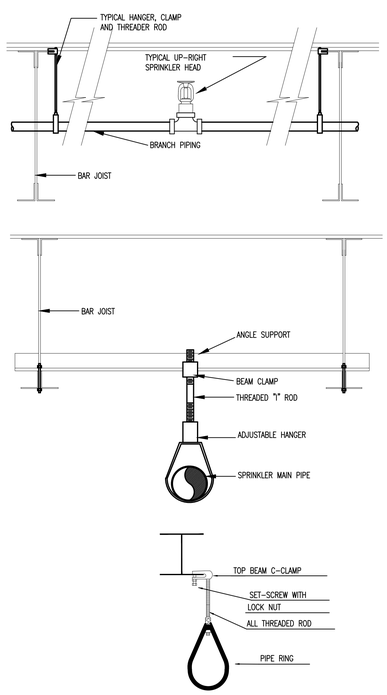

1 F1.0 TYPICAL HANGER DETAIL
NOT TO SCALE

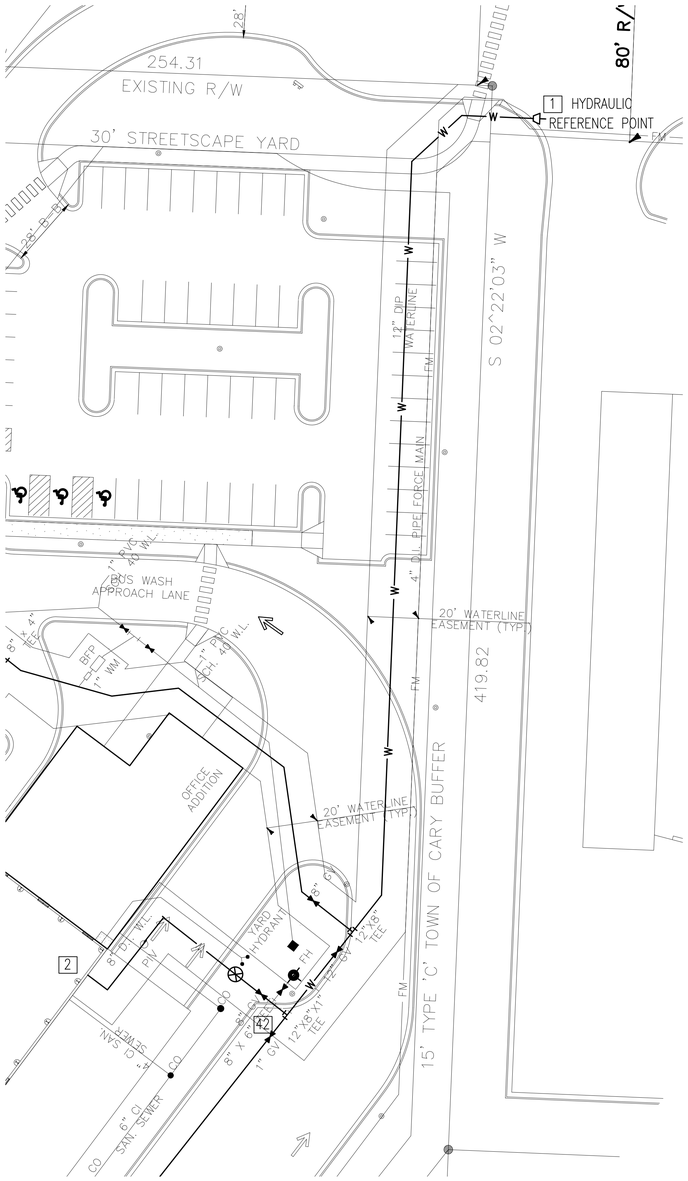

2 F1.0 SITE PLAN
1"-20'

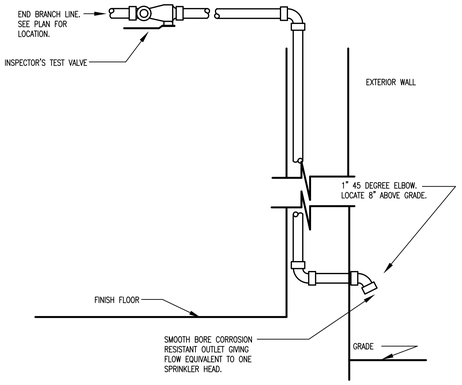

3 F1.0 INSPECTORS TEST CONNECTION
NOT TO SCALE

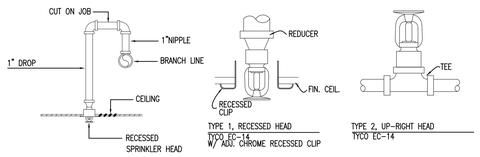

4 F1.0 SPRINKLER HEAD DETAIL
NOT TO SCALE

TTA

ADDITIONS TO MAINTENANCE FACILITY

5201 NELSON ROAD (MAINTENANCE BLDG)
5210 NELSON ROAD (VACANT LOT)
CARY, NORTH CAROLINA

COMPLETE FACILITIES SOLUTIONS

MOSER MAYER PHOENIX ASSOCIATES, PA

328 E. Market Street
Suite 200
Greensboro, N.C. 27401
Telephone 336-373-9800
Fax 336-373-0077

NORTH CAROLINA PROFESSIONAL SEAL 11244 ENGINEER THOMAS H. PHOENIX

MOSER MAYER PHOENIX ASSOCIATES, P.A. ENGINEERING COMPANY CERT. NO. C-784 NORTH CAROLINA GREENSBORO, N.C.

THIS DRAWING IS THE PROPERTY OF MOSER MAYER PHOENIX ASSOCIATES, P.A. AND IS NOT TO BE COPIED OR REPRODUCED IN PART OR WHOLE WITHOUT PERMISSION.

MULKEY ENGINEERS & CONSULTANTS
PO Box 33127
RALEIGH, N.C. 27636
(919) 851-1912
(919) 851-1918 (FAX)
WWW.MULKEYINC.COM

RECORD DRAWING DISCLAIMER

TO THE BEST OF OUR KNOWLEDGE, THESE DRAWINGS HAVE BEEN REVISED TO REFLECT CHANGES MADE DURING THE CONSTRUCTION PROCESS, BASED UPON THE MARKED-UP DRAWINGS AND OTHER DATA FURNISHED TO THE ARCHITECT BY THE CONTRACTOR OR CONTRACTORS. THE ARCHITECT DOES NOT ASSURE THE ACCURACY OF THAT INFORMATION OR TAKE RESPONSIBILITY FOR ANY ERROR OR OMISSION INCORPORATED INTO THE DRAWINGS AS A RESULT. THE OWNER IS ADVISED TO OBTAIN INDEPENDENT VERIFICATION PRIOR TO USING THE INFORMATION CONTAINED HEREIN.

REVISIONS

NO.	DATE	DESCRIPTION
	01-26-08	RECORD DRAWINGS

DATE	APRIL 28, 2006
PROJECT NUMBER	05111.00 (05156.00)
SCALE	AS NOTED
DRAWN BY	RAD

GENERAL NOTES AND DETAILS

F1.0

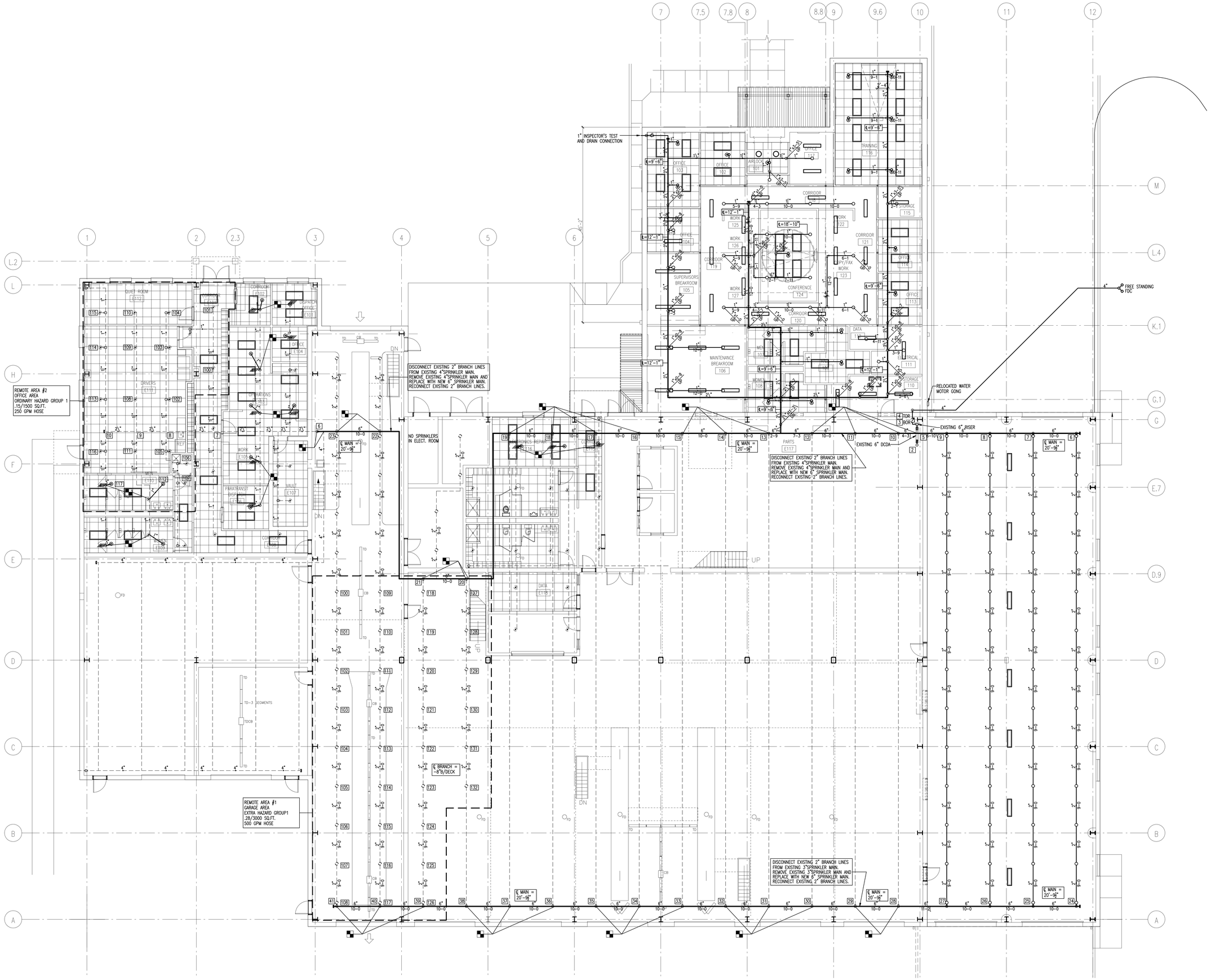

1 F1.1 FIRST FLOOR SPRINKLER PLAN
1/8"=1'-0"

ADDITIONS TO MAINTENANCE FACILITY

5201 NELSON ROAD (MAINTENANCE BLDG)
5210 NELSON ROAD (VACANT LOT)
CARY, NORTH CAROLINA

COMPLETE FACILITIES SOLUTIONS

MOSER MAYER PHOENIX ASSOCIATES, PA
328 E. Market Street
Suite 200
Greensboro, N.C. 27401
Telephone 336-373-9800
Fax 336-373-0077

NORTH CAROLINA PROFESSIONAL SEAL 10503 ENGINEER BRANDT H. WILLIAMS

MOSER MAYER PHOENIX ASSOCIATES P.A. CERT. NO. C-784 NORTH CAROLINA GREENSBORO, N.C.

THIS DRAWING IS THE PROPERTY OF MOSER MAYER PHOENIX ASSOCIATES, P.A. AND IS NOT TO BE COPIED OR REPRODUCED IN PART OR WHOLE WITHOUT PERMISSION.

MULKEY ENGINEERS & CONSULTANTS
PO Box 33127
RALEIGH, N.C. 27636
(919) 851-1912
(919) 851-1918 (FAX)
WWW.MULKEYINC.COM

RECORD DRAWING DISCLAIMER

TO THE BEST OF OUR KNOWLEDGE, THESE DRAWINGS HAVE BEEN REVISED TO REFLECT CHANGES MADE DURING THE CONSTRUCTION PROCESS, BASED UPON THE MARKED-UP DRAWINGS AND OTHER DATA FURNISHED TO THE ARCHITECT BY THE CONTRACTOR OR CONTRACTORS. THE ARCHITECT DOES NOT ASSURE THE ACCURACY OF THAT INFORMATION OR TAKE RESPONSIBILITY FOR ANY ERROR OR OMISSION INCORPORATED INTO THE DRAWINGS AS A RESULT. THE OWNER IS ADVISED TO OBTAIN INDEPENDENT VERIFICATION PRIOR TO USING THE INFORMATION CONTAINED HEREIN.

REVISIONS

NO.	DATE	DESCRIPTION
	01-26-08	RECORD DRAWINGS

DATE	APRIL 28, 2006
PROJECT NUMBER	05111.00 (05156.00)
SCALE	AS NOTED
DRAWN BY	RAD

FIRST FLOOR SPRINKLER PLAN

F1.1

GENERAL NOTES

1. PLANS AND ISOMETRICS ARE DIAGRAMMATIC. THERE IS NO INTENT TO INDICATE ALL OFFSETS AND FITTINGS REQUIRED. GENERALLY, PIPING SHALL BE INSTALLED PARALLEL OR PERPENDICULAR TO AND PLUMB WITH WALL CONSTRUCTION. SPECIAL CARE SHALL BE TAKEN TO COORDINATE EQUIPMENT AND PIPING LOCATIONS WITH ALL OTHER TRADES. IF INTENT OF DESIGN IS NOT CLEAR CONTRACTOR SHOULD NOTIFY THE ENGINEER IMMEDIATELY.
2. ON FLOOR PLAN DRAWINGS, SOIL AND WASTE PIPING IS SHOWN BELOW FLOOR. DOMESTIC WATER, VENTS, AND OTHER SUPPLY PIPING (UNLESS NOTED) IS ABOVE CEILING OR AS HIGH AS POSSIBLE IN SPACE.
3. PIPES RISING OR DROPPING WITHIN A STORY ARE NOTED "RISE" OR "DROP". PIPES RISING TO ANOTHER STORY ARE NOTED "UP". PIPES DROPPING TO ANOTHER STORY ARE NOTED "DOWN".
4. SOIL AND WASTE PIPING SHALL BE LAID ON MINIMUM 1/4" PER FT. SLOPE FOR PIPE SIZES LESS THAN 4", AND MINIMUM 1/8" PER FT. FOR PIPE 4" AND LARGER.
5. PLUMBING CONTRACT SHALL TERMINATE AT POINTS INDICATED ON PLAN. EXTENSION OF BUILDING SERVICE PIPING TO SITE UTILITY PIPING SHALL BE PART OF SITE UTILITY CONTRACT.
6. CONSTRUCTION INTERFACE BETWEEN PLUMBING AND OTHER SUB-CONTRACTS (I.E. SITE WORK, HVAC EQUIPMENT, ELECTRICAL WORK, ETC.) SHALL BE CLOSELY COORDINATED WITH OTHER DRAWINGS INCLUDED WITH THESE DOCUMENTS.
7. PROVIDE SHOCK ARRESTORS, SIZED IN ACCORDANCE WITH P.D.I. STANDARDS, AT EACH BRANCH SERVING FLUSH VALVE FIXTURES. ALSO PROVIDE SHOCK ARRESTORS AT ALL QUICK-CLOSING VALVE LOCATIONS SUCH AS DISHWASHERS, CLOTHES WASHERS, ICEMAKERS, ETC.
8. VALVES AND DEVICES INSIDE CHASES OR WALLS OR ABOVE NON-ACCESSIBLE CEILINGS SHALL BE PROVIDED WITH APPROPRIATE APPROPRIATELY SIZED ACCESS PANELS COMPATIBLE WITH SURROUNDING FINISHES. SUCH ACCESS PANELS SHALL BE FURNISHED BY THE PLUMBING CONTRACTOR FOR INSTALLATION BY THE GENERAL CONTRACTOR. PANELS SIZES SHALL BE MINIMALLY SIZED 16"x16".
9. PROVIDE CLEANOUTS AT LOCATIONS INDICATED ON THE DRAWINGS AND AT ALL OTHER POINTS NOT SPECIFICALLY INDICATED BUT REQUIRED BY THE PLUMBING CODE.
10. PLUMBING VENT PIPING PENETRATING ROOF SHALL BE INSTALLED BY PLUMBING CONTRACTOR. CUTTING OF HOLES AND FLASHING OF PENETRATIONS SHALL BE BY THE GENERAL CONTRACTOR.
11. PIPE SLEEVES ARE REQUIRED AT ALL INTERIOR AND EXTERIOR WALL PENETRATIONS. FIRE RATED WALLS ARE INDICATED ON THE PLANS BY USING MMPA STANDARD SYMBOLS (SEE SYMBOLS LEGEND THIS DWG.). PIPING PENETRATING FIRE RATED WALLS SHALL BE FIRESTOPPED IN ACCORDANCE WITH APPROPRIATE U.L. ASSEMBLY DETAILS FOR EACH GIVEN RATING. REFER TO DWG. G1.x FOR TYPICAL ASSEMBLY DETAILS. FIRESTOPPING INSTALLATION SHALL BE PERFORMED BY A CERTIFIED FIRESTOPPING APPLICATOR WORKING WITHIN THE PLUMBING CONTRACT. PROVIDE PIPE ESCUTCHEONS TO COVER FIRESTOPPING AND PENETRATION OPENINGS.
12. REFER TO ARCHITECTURAL DRAWINGS FOR DIMENSIONED LOCATIONS OF WALLS AND PARTITIONS AND FOR PARTITION THICKNESS AND CONSTRUCTION MATERIALS.
13. REFER TO STRUCTURAL DRAWINGS FOR DIMENSIONED COLUMN AND STRUCTURE LOCATIONS.
14. THE GENERAL CONTRACTOR SHALL PROVIDE ALL PAINTING. THE PLUMBING CONTRACTOR SHALL COVER AND PROTECT ALL PLUMBING CONTRACT EQUIPMENT, PANELS, CONTROLS, INSTRUMENTATION, MOTORS, SYSTEMS, AND COMPONENTS THAT MAY BE DAMAGED, OBSCURED OR COVERED BY THE PAINTING ACTIVITIES OF THE GENERAL CONTRACTOR. UNPROTECTED ITEMS THAT MAY BECOME DAMAGED SHALL BE REPLACED, NOT REPAIRED, AT THE PLUMBING CONTRACTOR'S EXPENSE. PROTECTED ITEMS THAT BECOME DAMAGED BY THE GENERAL CONTRACTOR DURING THE PAINTING ACTIVITIES SHALL BE REPLACED, NOT REPAIRED, AT THE GENERAL CONTRACTOR'S EXPENSE.
15. THE PLUMBING CONTRACTOR SHALL BE RESPONSIBLE FOR MAKING REPAIRS TO FINISHED SURFACES THAT MIGHT BE DAMAGED DURING CONSTRUCTION ASSOCIATED WITH PLUMBING WORK. THIS INCLUDES PATCHING AND REPAINTING TO MATCH FINISHED SURFACES WHERE WORK HAS BEEN COMPLETED.
16. EQUIPMENT SELECTIONS SCHEDULED ON THE DRAWINGS AND IN THE SPECIFICATIONS INDICATE A MINIMUM LEVEL OF ACCEPTABLE PERFORMANCE. SUBSTITUTION OF EQUIPMENT AND MATERIAL SHALL BE MADE IN ACCORDANCE WITH THE GENERAL CONDITIONS.
17. ALL PIPE ELEVATIONS ARE TO BOTTOM OF PIPE (NOT INSULATION), UNLESS OTHERWISE NOTED.
18. ANY SUBDIVISIONS OF THE DRAWINGS OR SPECIFICATIONS ARE NOT INTENDED TO ESTABLISH SUBDIVISION OF THE WORK, SUCH AS LIMITS OF A SUBCONTRACTORS WORK OR TRADE JURISDICTION.
19. THE CONTRACTOR SHALL PROVIDE WARRANTIES FOR ALL WORK, EQUIPMENT, MATERIAL, AND DEVICES FOR A MINIMUM PERIOD OF ONE YEAR FROM DATE OR FINAL ACCEPTANCE. EXTENDED WARRANTIES SHALL BE PROVIDED AS NOTED. DELIVERY DATES AND START-UP DATES SHALL NOT BE USED AS THE BASIS OF WARRANTY START PERIODS.
20. ALL MATERIALS, EQUIPMENT, AND DEVICES SHALL, AS A MINIMUM, COMPLY WITH THE REQUIRMENTS OF UL WHERE UL STANDARDS ARE ESTABLISHED FOR THOSE ITEMS. ALL ITEMS SHALL BE CLASSIFIED BY UL AS SUITABLE FOR THE PURPOSE USED.
21. ALL ITEMS SHALL BE NEW, UNLESS OTHERWISE NOTED. ALL MATERIALS, EQUIPMENT, AND DEVICES SHALL BE CURRENT PRODUCTS BY MANUFACTURER REGULARLY ENGAGED IN THE PRODUCTION OF SUCH PRODUCTS.
22. ALL EQUIPMENT AND MATERIALS SHALL BE INSTALLED IN ACCORDANCE WITH MANUFACTURER'S PRINTED INSTRUCTIONS AND RECOMMENDATIONS.
23. THE CONTRACTOR SHALL COORDINATE WITH AND OBTAIN PERMITS AND INSPECTIONS FROM THE AUTHORITY HAVING JURISDICTION. ALL FEES SHALL BE INCLUDED WITH THE BID.
24. ALL ASPECTS OF THE WORK REQUIRED FOR THIS PROJECT SHALL COMPLY, AS A MINIMUM, WITH THE PROVISIONS OF ASHRAE 90.1 AND THE LATEST EDITION OF THE NORTH CAROLINA STATE PLUMBING CODE.

SYMBOLS & ABBREVIATIONS

- SOIL OR SANITARY WASTE PIPING
- OLW — OIL LADEN WASTE PIPING
- VENT PIPING
- TP — TRAP PRIMER TUBING
- COLD WATER PIPING
- HOT WATER PIPING
- LP GAS — PROPANE GAS PIPING
- CA — COMPRESSED AIR PIPING
- ATF — AUTOMATIC TRANSMISSION FLUID
- GL — GEAR OIL
- MO — MOTOR OIL
- CG — CHASSIS GREASE
- ANFR — ANTIFREEZE SOLUTION
- H_2O — PROCESS NON-POTABLE WATER
- GATE VALVE
- BALL VALVE
- CHECK VALVE
- GAS COCK
- WCO — CLEANOUT (BASE OR WALL)
- FCO — FLOOR CLEANOUT
- YCO — YARD CLEANOUT
- 1 — COMPRESSED AIR DROP AND TYPE NUMBER
- FIRE RATED WALL -2 HOURS

SA-B	SHOCK ARRESTOR-PDI SYMBOL	DEMO	TO REMOVE OR ABANDON
VTA	VENT TO ABOVE	GC	GENERAL CONTRACTOR
VFB	VENT FROM BELOW	SAN.	SANITARY
VTR	VENT THRU ROOF	BFF	BELOW FINISHED FLOOR
MBH	THOUSAND B.T.U.H.	COB	CLEANOUT AT BASE
PC	PLUMBING CONTRACTOR	AFG	ABOVE FINISHED GRADE
BFG	BELOW FINISH GRADE	AFF	ABOVE FINISHED FLOOR

LOAD SUMMARY

SOIL AND WASTE SYSTEM - NEW ADDITION

FIXTURE UNITS	43	MIN. SERVICE SIZE	4"

ANTICIPATED WASTEWATER FLOW IN ADDITION TO EXISTING BUILDING FLOW = 825 GPD

OFFICE -35 PERSONS x 15 = 525 GPD
MAINTENANCE -20 PERSONS x 15 = 300 GPD

DOMESTIC WATER SYSTEM - NEW ADDITION

FIXTURE UNITS	51	PEAK GPM	50	MIN. SERVICE SIZE	2"

NO NEW SERVICE REQUIRED. NEW FISTURES WILL BE FED BY EXISTING BUILDING DOMESTIC WATER SYSTEM.

DOMESTIC WATER HEATING

ENERGY SOURCE	ELECTRICITY
MAX. H.W. DEMAND	45 GPH
STORAGE TANK SIZE	30 GALLONS

L.P. GAS LOADS

EXISTING BUILDING	1965 MBH
ROOFTOP UNITS	270 MBH
INFRARED UNITS	520 MBH
GRAND TOTAL LOAD	2755 MBH

GAS SERVICE PRESSURE	2 P.S.I.*	*L.P. GAS VENDOR TO VERIFY
PIPING CIRCUIT LENGTH	300 L.F.	
MAIN HEADER SIZE	2"	EXISTING

ROOF DRAINAGE SYSTEM

SCUPPER BOX AND DOWNSPOUT SIZING BASED ON TABLE A101.2 OF THE 1997 NCSBC USING A CORRECTION FACTOR TO ACHIEVE SCUPPER SIZES SUITABLE FOR AN 3.5" PER HOUR RAINFALL INTENSITY. REFER TO ARCHITECTURAL DRAWINGS FOR SIZES AND LOCATIONS OF SCUPPERS BOXES AND DOWNSPOUTS.

COMPRESSED AIR LOADS

EXISTING LOADS	130 CFM
NEW OUTLET LOADS	27 CFM

(12) OUTLETS x 15 CFM x 15% DIVERSITY FACTOR

TOTAL UPGRADED CFM REQUIREMENT	157 CFM
EXIST. DUPLEX COMPRESSOR RATED CAPACITY	164 CFM @ 100 P.S.I. PRESSURE

PLUMBING FIXTURE SCHEDULE

MARK	FIXTURE TYPE	MANUFACTURER	CATALOG NO.	CONNECTION SIZES WASTE	C.W.	H.W.	BRASS	TRAP AND SUPPLIES	ACCESSORIES	MOUNTING	REMARKS
WC-1	ELONGATED BOWL WATER CLOSET W/ FLUSH VALVE LOW CONSUMPTION (1.6 GPF) W/ INTEGRAL TRAP PRIMER	AMERICAN STANDARD	2257.103	4"	1"	--	SLOAN #111 FLUSH VALVE 11-1/2" CENTER TO TOP OF BOWL		WHITE OPEN FRONT SEAT ZURN 1200 SERIES CHAIR CARRIER -NO HUB SLOAN VBF-72-A1 VACUUM BREAKER FLOOR DRAIN PRIMER	WALL MOUNTED TOP MIN. 16-1/8" A.F.F.	FOR HANDICAP AND GENERAL USE REFER TO DIAGRAMS FOR CONFIGURATION VERTICAL & HORIZONTAL CARRIERS
WC-2	ELONGATED BOWL WATER CLOSET W/ FLUSH VALVE LOW CONSUMPTION (1.6 GPF)	AMERICAN STANDARD	2257.103	4"	1"	--	SLOAN #111 FLUSH VALVE 11-1/2" CENTER TO TOP OF BOWL		WHITE OPEN FRONT SEAT ZURN 1200 SERIES CHAIR CARRIER -NO HUB	WALL MOUNTED TOP MIN. 15" A.F.F.	FOR GENERAL USE ONLY REFER TO DIAGRAMS FOR CONFIGURATION VERTICAL & HORIZONTAL CARRIERS
WC-3	ELONGATED BOWL WATER CLOSET W/ FLUSH VALVE LOW CONSUMPTION (1.6 GPF) W/ INTEGRAL TRAP PRIMER	AMERICAN STANDARD	2257.103	4"	1"	--	SLOAN #111 FLUSH VALVE 11-1/2" CENTER TO TOP OF BOWL		WHITE OPEN FRONT SEAT ZURN 1200 SERIES CHAIR CARRIER -NO HUB SLOAN VBF-72-A1 VACUUM BREAKER FLOOR DRAIN PRIMER	WALL MOUNTED TOP MIN. 15" A.F.F.	FOR HANDICAP AND GENERAL USE REFER TO DIAGRAMS FOR CONFIGURATION VERTICAL & HORIZONTAL CARRIERS
WC(ER)	WALL MOUNTED WATER CLOSET CARRIER, AND FLUSH VALVE TO BE RELOCATED BY P.C.										
UR-1	URINAL -WALL HUNG (1.0 GPF)	AMERICAN STANDARD	6501.010	2"	3/4"	--	SLOAN #186-1 FLUSH VALVE		ZURN Z-1221 PLATE TYPE FLOOR SUPPORT SYSTEM	STUD WALL 17" FLOOR TO LIP	FOR HANDICAP AND GENERAL USE
UR(ER)	WALL MOUNTED URINAL AND FLUSH VALVE TO BE BE RELOCATED BY P.C.										
LV-1	LAVATORY -COUNTERTOP VITREOUS CHINA, 20" x 17" ELLIPTICAL FOR 4" CENTERS	AMERICAN STANDARD	0476.028	1-1/4"	3/8"	3/8"	DELTA MODEL 523-WFHGMMDF 0.5 GPM SPRAY OUTLET, GRID STRAINER AND TAILPIECE	McGUIRE #170 -1/2" SWEAT x 3/8" OD CHROME SUPPLY McGUIRE #8902C 1-1/4" x 1-1/2" CAST BRASS P-TRAP		COUNTERTOP OF FABRICATED A.D.A. COMPATIBLE ENCLOSURE SEE ARCHITECTURAL DWGS.	
LV(E)	CONTERTOP LAVATORY TO REMAIN IN SERVICE. NO WORK REQUIRED										
SK-1	SINK -ADA COMPLIANT COUNTERTOP, STAINLESS STEEL, SINGLE COMPARTMENT 22" x 19-1/2" OVERALL	ELKAY	LRAD-2219	1-1/2"	1/2"	1/2"	DELTA MODEL 300 SINK FAUCET WITH 6" SWING SPOUT AND SPRAY	McGUIRE #171 -1/2" SWEAT x 1/2" OD PREWRAPPED SUPPLIES. McGUIRE PW1152WC 1-1/2" PREWRAPPED BRASS P-TRAP		COUNTERTOP OF FABRICATED CABINET. SEE ARCHITECTURAL DWGS.	
SK-2	SINK -ADA COMPLIANT COUNTERTOP, STAINLESS STEEL, DOUBLE COMPARTMENT 33" x 19-1/2" OVERALL	ELKAY	LRAD-3319	1-1/2"	1/2"	1/2"	DELTA MODEL 300 SINK FAUCET WITH 6" SWING SPOUT AND SPRAY	McGUIRE #171 -1/2" SWEAT x 1/2" OD PREWRAPPED SUPPLIES. McGUIRE PW1152WC 1-1/2" PREWRAPPED BRASS P-TRAP	MCGUIRE PREWRAPPED CONTINUOUS WASTE	COUNTERTOP OF FABRICATED CABINET. SEE ARCHITECTURAL DWGS.	
MR-1	CORNER MOP RECEPTOR, TERRAZZO, 28" x 28" x 12" DEEP	FLORESTONE	MODEL 97 HALF ROUND	3"	1/2"	1/2"	AMER. STD. 8344.111 ROUGH CHROME FAUCET W/VACUUM BREAKER, STOPS & TOP BRACE	AMER. STD. 7721.038 STRAINER AND SOCKET 3" C.I. P-TRAP	3' LENGTH OF RUBBER HOSE WITH HOSE THD. CONNECTION	FIXTURE FLOOR MTD. FAUCET AT 36" A.F.F.	
FWH-1	WALL HYDRANT -FREEZELESS FLUSH MOUNTED	WOODFORD	65	--	3/4"	--				WALL -24" ABOVE GRADE	LOOSE KEY W/VACUUM BREAKER
HB-1	CHROME HOSE BIBB	WOODFORD	24P	--	1/2"	--				MOUNT BELOW LAVATORY AT 8" A.F.F. IN EACH TOILET ROOM	LOOSE KEY, VACUUM BREAKER
IB-1	RECESSED ICEMAKER VALVE BOX	OATEY	38618	--	1/2"	--			1" DEEP PLASTIC FACE PLATE	MOUNT BEHIND REFRIGERATORS AT 48" A.F.F.	

FIXTURE SCHEDULE NOTES:

1. EQUIVALENT FIXTURES MANUFACTURED BY ELJER, KOHLER, OR CRANE ARE ALSO ACCEPTABLE.
2. EQUIVALENT STAINLESS STEEL SINKS BY JUST OR MOEN MAY BE FURNISHED.
3. REFER TO SPECIFICATIONS FOR LISTING OF ACCEPTABLE MANUFACTURER'S FOR FAUCETS AND OTHER ACCESSORIES.
4. CATALOG NUMBERS ARE SHOWN TO SUPPLEMENT FIXTURE DESCRIPTION. IF MODEL NUMBER IS DISCONTINUED OR DOES NOT MEET CRITERIA SET FORTH BY FIXTURE TYPE DESCRIPTION, THE ARCHITECT/ENGINEER SHOULD BE NOTIFIED IMMEDIATELY.
5. IN ADA CLOSET STALLS, FLUSH VALVE HANDLES OR OPERATORS SHALL BE MOUNTED ON THE WIDER SIDE OF THE STALL.
6. FOR INTERIOR WALL MOUNTED FAUCETS, HYDRANTS, HOSEBIBBS, TEC. WHOSE MOUNTING HEIGHT IS NOT DEPENDENT ON ADA REQUIREMENTS, ADJUST THE FINAL MOUNTING HEIGHT +/-2" TO ACCOMODATE CENTERING OF FAUCET IN CERAMIC TILE (IF USED). REFER TO ARCHITECTURAL DRAWINGS AND COORDINATE ROUGH-IN REQUIREMENTS WITH THE G.C.

PLUMBING DRAIN SCHEDULE

MARK	LOCATION	STRAINER SIZE AND TYPE		OUTLET SIZE	TRAP PRIMER CONNECTION	P-TRAP SIZE AND TYPE	MFR. & MODEL NO.	REMARKS
FD-1	TOILET ROOMS	5" DIA.	POL. BRONZE	3"	YES	3" DEEP SEAL	ZURN: ZB-415-3IG-5B-Y-P	NON-MEMBRANE FLOOR, TRAP PRIMED BY WATER CLOSET
FD-2	MAINTENANCE BAY DRAIN	16"x16"	SQUARE C.I.	6"	NO	6"	ZURN: Z-645-HL	NON-MEMBRANE FLOOR

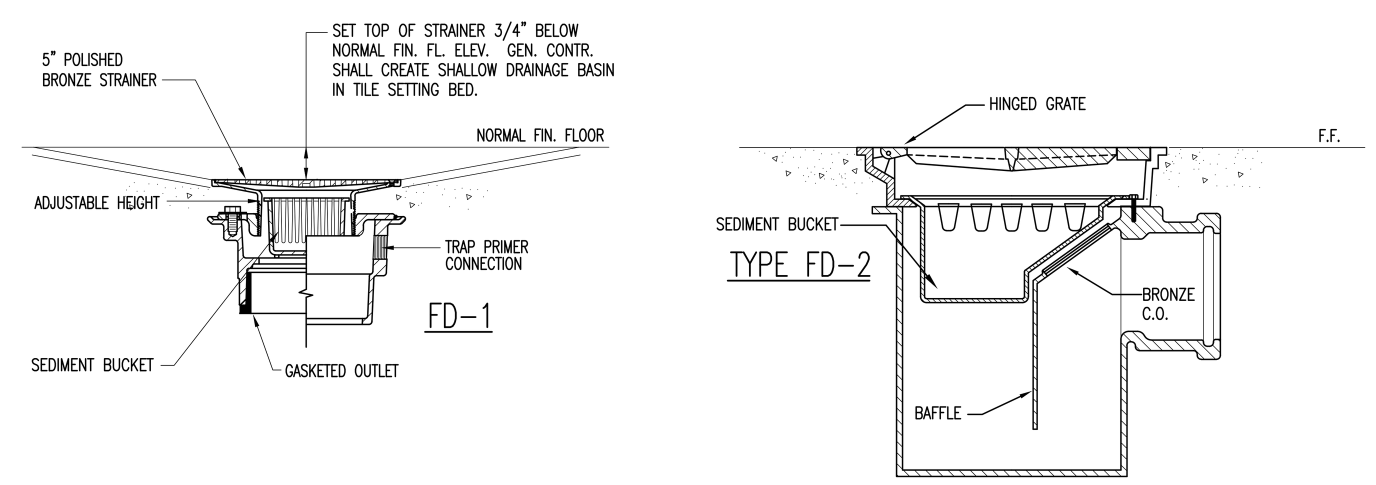

1 / P0.1 FLOOR DRAIN SCHEDULE AND CONFIGURATIONS
NOT TO SCALE

WATER HEATER SCHEDULE

DESIGNATION	SERVING	TYPE	STOR. CAPACITY	1ST HR. DELIVERY	VOLTS/PH/HZ	INPUT	MANUF'R & MODEL NO.	REMARKS
WH-1	OFFICE ADDITION	ELECTRIC	30 GALLONS	45 GALLONS	480/3/60	6.0 KW	LOCHINVAR MODEL ETX030PP	REFER TO MTG. DETAIL

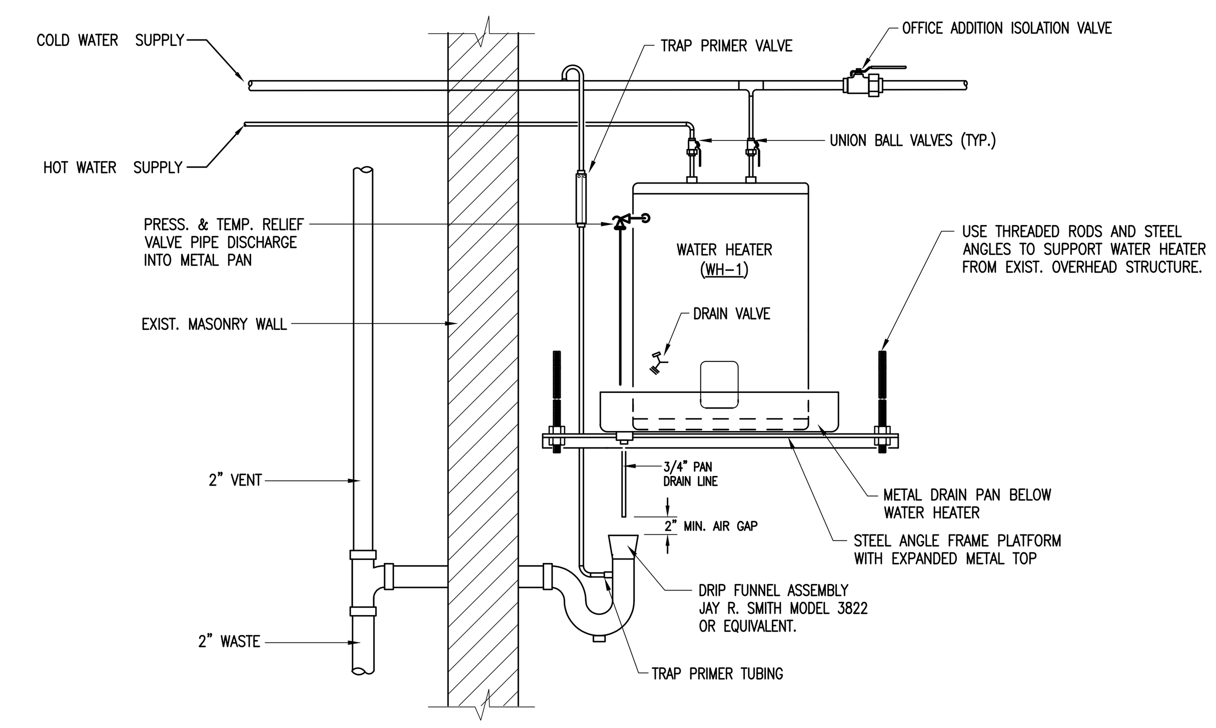

2 / P0.1 ELECTRIC WATER HEATER DETAIL
N.T.S.

ADDITIONS TO MAINTENANCE FACILITY

5201 NELSON ROAD (MAINTENANCE BLDG)
5210 NELSON ROAD (VACANT LOT)
CARY, NORTH CAROLINA

COMPLETE FACILITIES SOLUTIONS
MOSER MAYER PHOENIX ASSOCIATES, PA
328 E. Market Street
Suite 200
Greensboro, N. C. 27401
Telephone 336-373-9800
Fax 336-373-0077

KENNETH CHARLES MAYER, JR. REGISTERED ARCHITECT CERT. NO. 4305 NORTH CAROLINA GREENSBORO N.C.
MOSER MAYER PHOENIX ASSOCIATES P.A. REGISTERED ARCHITECTURAL CORPORATION CERT. NO. 361 NORTH CAROLINA GREENSBORO N.C.

THIS DRAWING IS THE PROPERTY OF MOSER MAYER PHOENIX ASSOCIATES, P.A. AND IS NOT TO BE COPIED OR REPRODUCED IN PART OR WHOLE WITHOUT PERMISSION.

MULKEY ENGINEERS & CONSULTANTS
PO Box 33127
Raleigh, N.C. 27636
(919) 851-1912
(919) 851-1918 (FAX)
WWW.MULKEYINC.COM

RECORD DRAWING DISCLAIMER

TO THE BEST OF OUR KNOWLEDGE, THESE DRAWINGS HAVE BEEN REVISED TO REFLECT CHANGES MADE DURING THE CONSTRUCTION PROCESS, BASED UPON THE MARKED-UP DRAWINGS AND OTHER DATA FURNISHED TO THE ARCHITECT BY THE CONTRACTOR OR CONTRACTORS. THE ARCHITECT DOES NOT ASSURE THE ACCURACY OF THAT INFORMATION OR TAKE RESPONSIBILITY FOR ANY ERROR OR OMISSION INCORPORATED INTO THE DRAWINGS AS A RESULT. THE OWNER IS ADVISED TO OBTAIN INDEPENDENT VERIFICATION PRIOR TO USING THE INFORMATION CONTAINED HEREIN.

REVISIONS

NO.	DATE	DESCRIPTION
	01-26-08	RECORD DRAWINGS

DATE	APRIL 28, 2006
PROJECT NUMBER	05111.00 (05156.00)
SCALE	AS NOTED
DRAWN BY	GMH

FIXTURE SCHEDULE, NOTES, SYMBOLS, LOAD SUMMARY

P0.1

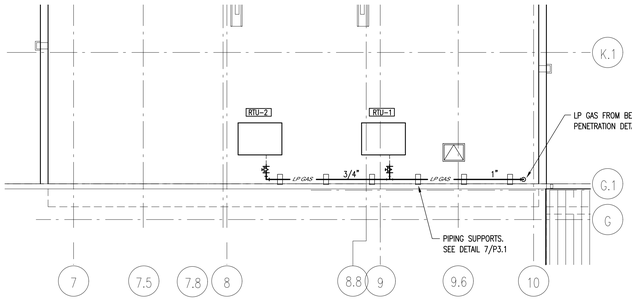

2 P1.1 PART ROOF PLAN - LP GAS PIPING

111P1.1

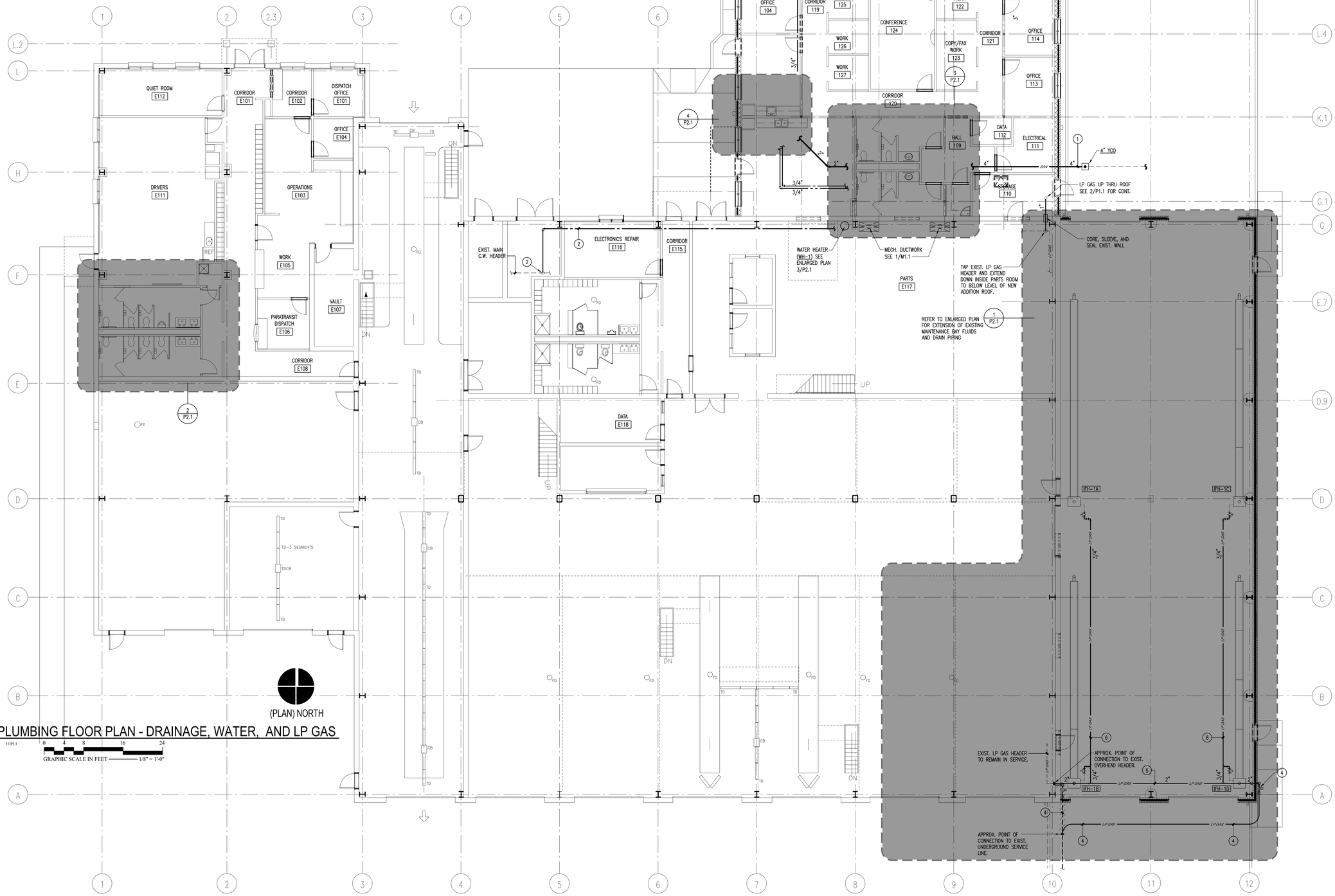

1 P1.1 PLUMBING FLOOR PLAN - DRAINAGE, WATER, AND LP GAS

111P1.1

KEYED PLUMBING NOTES

1. PROVIDE NEW 4" SANITARY SEWER BRANCH FROM NEW OFFICE ADDITION TO 5'-0" OUTSIDE THE BUILDING. TERMINATE THE BRANCH WITH A TWO-WAY YARD CLEANOUT. REFER TO CIVIL DRAWINGS FOR CONTINUATION OF PIPING TO SANITARY SEWER SYSTEM.
2. INTERCEPT EXISTING 2" DOMESTIC COLD WATER IN MECHANICAL 205B AND EXTEND NEW 2" COPPER C.W.LINE TO NEW OFFICE ADDITION.
3. PROVIDE FROSTPROOF WALL HYDRANT (FWH-1) AND 3/4" C.W. SUPPLY LINES AT LOCATIONS INDICATED. PROVIDE 3/4" BALL TYPE ISOLATION VALVE AT ACCESSIBLE LOCATION.
4. PLBG. CONTRACTOR SHALL COORDINATE UNDERGROUND SERVICE AND LP GAS REGULATOR RELOCATION WITH LP GAS VENDOR. LP GAS VENDOR SHALL VERIFY GAS DELIVERY PRESSURE INSIDE THE BUILDING (2 PSI ACCORDING TO AS-BUILT DRAWINGS) AND PROVIDE COMPATIBLE REGULATOR AT NEW LOCATION. LP GAS VENDOR SHALL ALSO REMOVE EXIST. GAS SERVICE LINE BACK TO POINT OF CONNECTION TO NEW UNDERGROUND SERVICE LINE.
5. PLBG. CONTRACTOR SHALL EXTEND PIPING FROM NEW REGULATOR LOCATION AND MAKE CONNECTION TO EXISTING OVERHEAD HEADER IN EXIST. MAINTENANCE BAY.
6. PLBG. CONTRACTOR SHALL EXTEND NEW LP GAS SUPPLIES TO GAS-FIRED INFRARED HEATERS IN MAINTENANCE BAY. PROVIDE GAS COCK AT END OF DROP. REGULATORS SHALL BE FURNISHED AND INSTALLED IN MECHANICAL CONTRACT. SEE DETAIL 8/M4.1.

TTA

ADDITIONS TO MAINTENANCE FACILITY

5201 NELSON ROAD (MAINTENANCE BLDG)
5210 NELSON ROAD (VACANT LOT)
CARY, NORTH CAROLINA

COMPLETE FACILITIES SOLUTIONS

MOSER MAYER PHOENIX ASSOCIATES, PA

328 E. Market Street
Suite 200
Greensboro, N.C. 27401
Telephone 336-373-9800
Fax 336-373-0077

NORTH CAROLINA PROFESSIONAL SEAL 11244 ENGINEER THOMAS H. PHOENIX

MOSER MAYER PHOENIX ASSOCIATES, P.A. ENGINEERING CORPORATION CERT. NO. C-784 NORTH CAROLINA GREENSBORO, N.C.

THIS DRAWING IS THE PROPERTY OF MOSER MAYER PHOENIX ASSOCIATES, P.A. AND IS NOT TO BE COPIED OR REPRODUCED IN PART OR WHOLE WITHOUT PERMISSION.

MULKEY ENGINEERS & CONSULTANTS
PO Box 33157
RALEIGH, N.C. 27636
(919) 851-1912
(919) 851-1918 (FAX)
WWW.MULKEYINC.COM

RECORD DRAWING DISCLAIMER

TO THE BEST OF OUR KNOWLEDGE, THESE DRAWINGS HAVE BEEN REVISED TO REFLECT CHANGES MADE DURING THE CONSTRUCTION PROCESS, BASED UPON THE MARKED-UP DRAWINGS AND OTHER DATA FURNISHED TO THE ARCHITECT BY THE CONTRACTOR OR CONTRACTORS. THE ARCHITECT DOES NOT ASSURE THE ACCURACY OF THAT INFORMATION OR TAKE RESPONSIBILITY FOR ANY ERROR OR OMISSION INCORPORATED INTO THE DRAWINGS AS A RESULT. THE OWNER IS ADVISED TO OBTAIN INDEPENDENT VERIFICATION PRIOR TO USING THE INFORMATION CONTAINED HEREIN.

REVISIONS

NO.	DATE	DESCRIPTION
	01-26-08	RECORD DRAWINGS

DATE	APRIL 28, 2006
PROJECT NUMBER	05111.00 (05156.00)
SCALE	AS NOTED
DRAWN BY	GMH

FLOOR PLAN
PLUMBING

P1.1

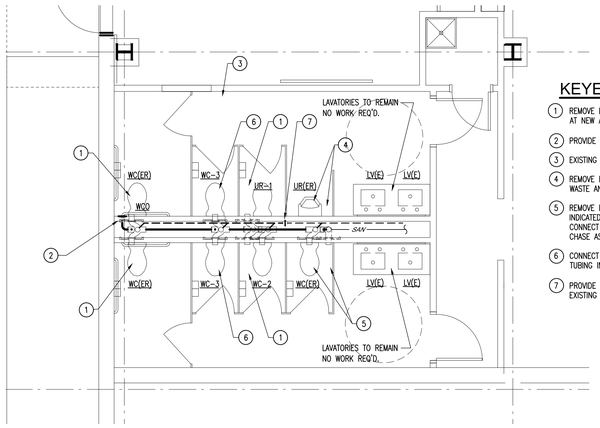

KEYED PLUMBING NOTES FOR PLAN 2/P2.1

1. REMOVE EXISTING ADA COMPLIANT WATER CLOSETS AND CARRIERS AND RE-INSTALL AT NEW ADA STALL LOCATION.
2. PROVIDE END OF LINE WALL CLEANOUT IN MEN'S TOILET.
3. EXISTING CMU WALL TO BE REMOVED BY GEN. CONTR.
4. REMOVE EXISTING URINAL AND RE-INSTALL AT LOCATION INDICATED. RE-WORK WASTE AND WATER SUPPLY PIPING INSIDE CHASE AS REQUIRED.
5. REMOVE EXISTING WATER CLOSET AND CARRIER AND RE-INSTALL AT LOCATION INDICATED. PROVIDE NEW HORIZONATAL CARRIER AND RE-WORK WASTE PIPING TO CONNECT TO VERTICAL STUBOUT AT FLOOR. RE-WORK WATER SUPPLY PIPING IN CHASE AS REQUIRED.
6. CONNECT WATER CLOSET TRAP PRIMERS TO EXISTING FLOOR DRAIN TRAP PRIMER TUBING INSIDE CHASE.
7. PROVIDE 2" VENT PIPING INSIDE CHASE FOR NEW FIXTURES AND CONNECT TO EXISTING VENT SYSTEM.

2/P2.1 ENLARGED PLAN - EXIST. RENOVATED TOILETS

111P1.1 — 1/4" = 1-0"

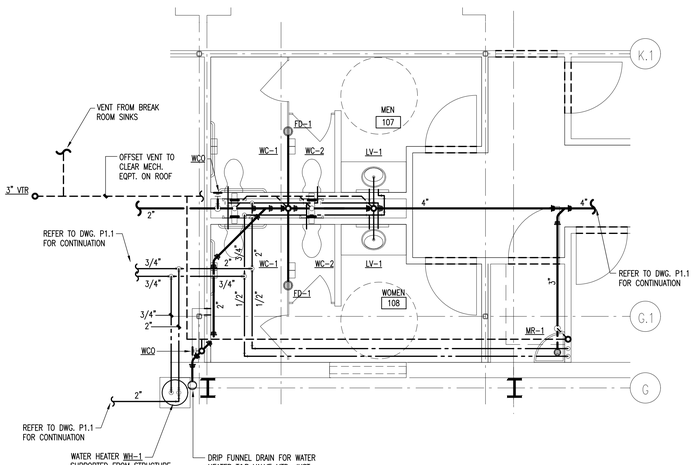

3/P2.1 ENLARGED PLAN - ADDITION TOILETS

111P1.1 — 1/4" = 1'-0"

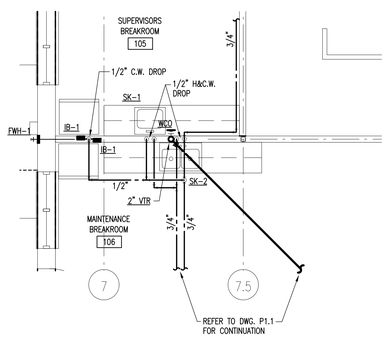

4/P2.1 ENLARGED PLAN - BREAK ROOMS

111P1.1 — 1/4" = 1'-0"

KEYED PLUMBING NOTES FOR PLAN 1/P2.1

1. EXISTING YARD CLEANOUT OUTSIDE OF LIFT BAY WALL (APPROX. INV. EL. 3.0' BELOW FIN. FLOOR). EXCAVATE CLEANOUT AND EXTEND 6" C.I. OIL-LADEN WASTE LINE TO SERVE BAY NEW DRAINS.
2. EXISTING 4" VENT TO REMAIN IN SERVICE.
3. ROUTE 6" OIL-LADEN WASTE NEAR WALL TO PROVIDE NEW 4" VENT WITH CLEANOUT AT BASE. ROUTE VENT EXPOSED UP WALL AND THROUGH ROOF.
4. EXISTING BUS MAINTENANCE FLUID, COMPRESSED AIR, AND NON-POTABLE WATER PIPING OVERHEAD. EXTEND EACH SERVICE TO NEW SERVICE BAY AND PROVIDE (2) NEW OVERHEAD REEL BANKS.
5. OVERHEAD BUS MAINTENANCE FLUID, COMPRESSED AIR, AND AND NON-POTABLE WATER REEL BANKS. SEE DETAIL 3/P3.1.
6. COMPRESSED AIR OUTLETS AROUND BAY PERIMETER. SEE DETAIL 6/P3.1.
7. RELOCATE LP GAS REGULATOR ASSEMBLY AT EXISTING SOUTHEAST BUILDING CORNER. EXTEND EXISTING 2" LP GAS PIPING ABOVE MAINTENANCE BAY DOORS TO PREFERRED NEW LOCATION AT NEW MAINTENANCE BAY SOUTHEAST CORNER.

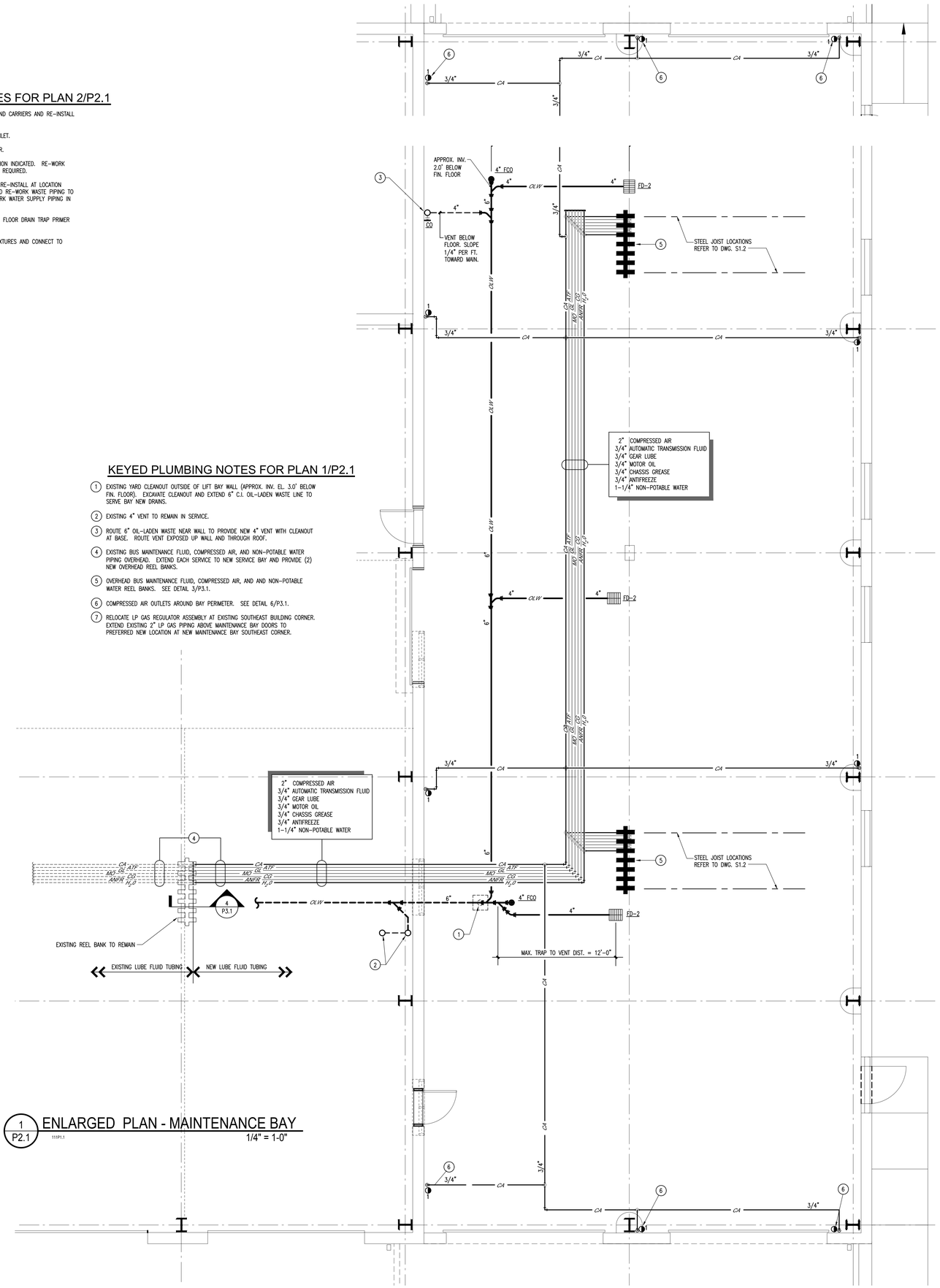

1/P2.1 ENLARGED PLAN - MAINTENANCE BAY

111P1.1 — 1/4" = 1-0"

ADDITIONS TO MAINTENANCE FACILITY

5201 NELSON ROAD (MAINTENANCE BLDG)
5210 NELSON ROAD (VACANT LOT)
CARY, NORTH CAROLINA

COMPLETE FACILITIES SOLUTIONS

MOSER MAYER PHOENIX ASSOCIATES, PA
328 E. Market Street
Suite 200
Greensboro, N.C. 27401
Telephone 336-373-9800
Fax 336-373-0077

NORTH CAROLINA PROFESSIONAL SEAL 11244 ENGINEER THOMAS H. PHOENIX

MOSER MAYER PHOENIX ASSOCIATES, P.A. CERT. NO. C-784 GREENSBORO, N.C.

THIS DRAWING IS THE PROPERTY OF MOSER MAYER PHOENIX ASSOCIATES, P.A. AND IS NOT TO BE COPIED OR REPRODUCED IN PART OR WHOLE WITHOUT PERMISSION.

MULKEY ENGINEERS & CONSULTANTS
PO Box 33127
RALEIGH, N.C. 27636
(919) 851-1912
(919) 851-1918 (FAX)
WWW.MULKEYINC.COM

RECORD DRAWING DISCLAIMER

TO THE BEST OF OUR KNOWLEDGE, THESE DRAWINGS HAVE BEEN REVISED TO REFLECT CHANGES MADE DURING THE CONSTRUCTION PROCESS, BASED UPON THE MARKED-UP DRAWINGS AND OTHER DATA FURNISHED TO THE ARCHITECT BY THE CONTRACTOR OR CONTRACTORS. THE ARCHITECT DOES NOT ASSURE THE ACCURACY OF THAT INFORMATION OR TAKE RESPONSIBILITY FOR ANY ERROR OR OMISSION INCORPORATED INTO THE DRAWINGS AS A RESULT. THE OWNER IS ADVISED TO OBTAIN INDEPENDENT VERIFICATION PRIOR TO USING THE INFORMATION CONTAINED HEREIN.

REVISIONS

NO.	DATE	DESCRIPTION
	01-26-08	RECORD DRAWINGS

DATE	APRIL 28, 2006
PROJECT NUMBER	05111.00 (05156.00)
SCALE	AS NOTED
DRAWN BY	GMH

ENLARGED AREA PLUMBING PLANS

P2.1

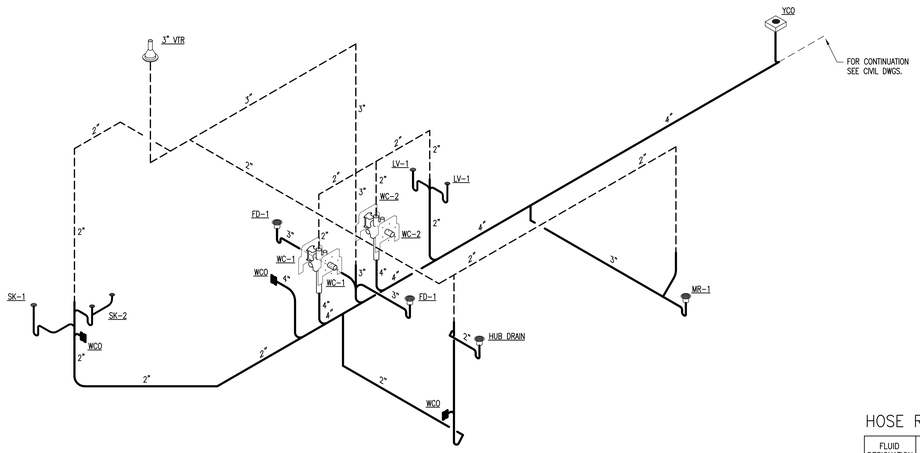

1 / P3.1 WASTE AND VENT DIAGRAM - TOILETS 107 AND 108
N.T.S.

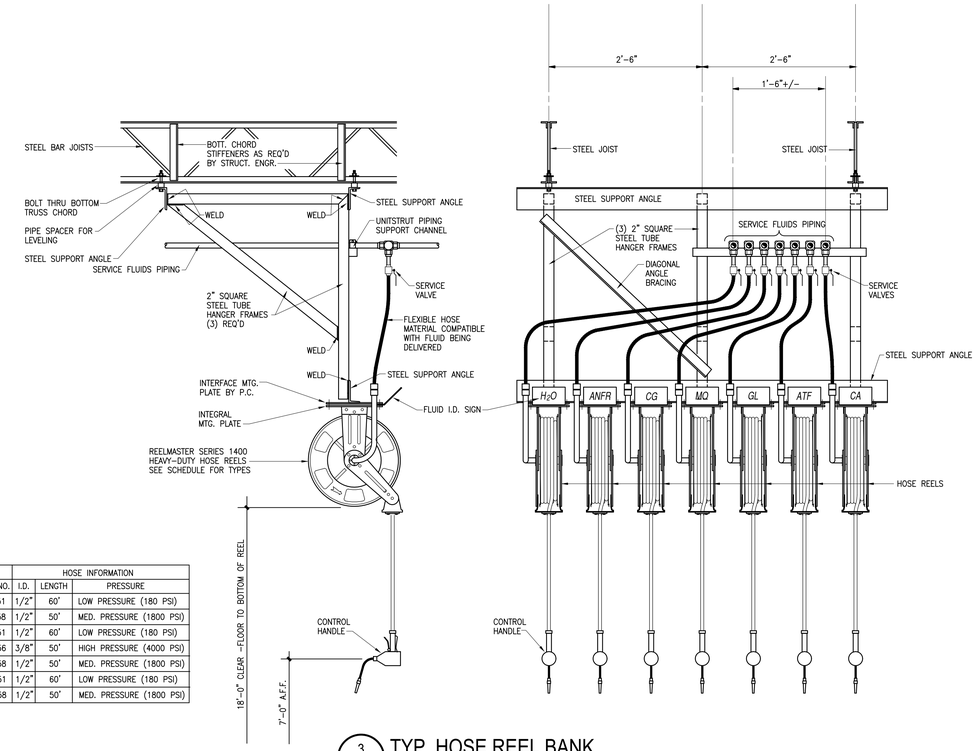

3 / P3.1 TYP. HOSE REEL BANK
1" = 1'-0"

HOSE REEL SCHEDULE

FLUID DESIGNATION	FLUID NAME	REEL INFORMATION		HOSE INFORMATION		
		MANUFACTURER	MODEL NO.	I.D.	LENGTH	PRESSURE
ANFR	ANTIFREEZE SOLUTION	GRACO	224-051	1/2"	60'	LOW PRESSURE (180 PSI)
ATF	AUTO TRANSMISSION FLUID	GRACO	224-058	1/2"	50'	MED. PRESSURE (1800 PSI)
CA	COMPRESSED AIR	GRACO	224-051	1/2"	60'	LOW PRESSURE (180 PSI)
CG	CHASSIS GREASE	GRACO	224-056	3/8"	50'	HIGH PRESSURE (4000 PSI)
GL	GEAR LUBRICANT	GRACO	224-058	1/2"	50'	MED. PRESSURE (1800 PSI)
H_2O	NON-POTABLE WATER	GRACO	224-051	1/2"	60'	LOW PRESSURE (180 PSI)
MO	MOTOR OIL	GRACO	224-058	1/2"	50'	MED. PRESSURE (1800 PSI)

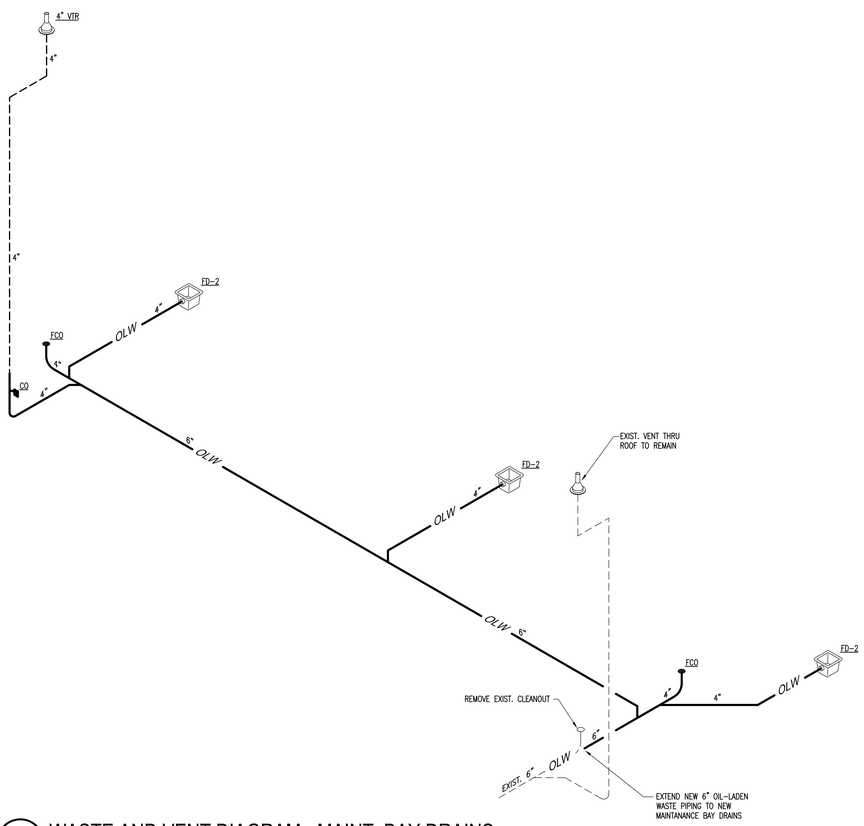

2 / P3.1 WASTE AND VENT DIAGRAM - MAINT. BAY DRAINS
N.T.S.

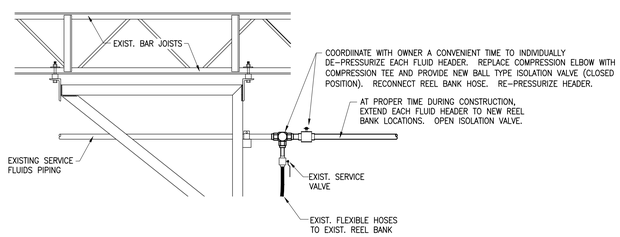

4 / P3.1 FLUIDS HEADER EXTENSION DETAIL
1" = 1'-0"

NOTE:
PLUMBING CONTRACTOR TO INSTALL PIPING TO CORRECT LENGTH. ALL OTHER WORK (FLASHINGS, SEALANTS, ETC.) BY GENERAL CONTRACTOR

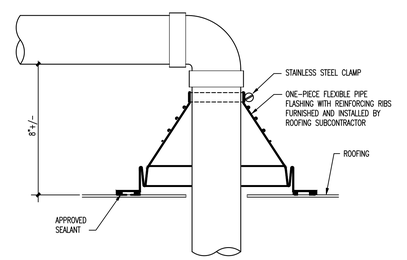

5 / P3.1 L.P. GAS PENETRATION AT ROOF
N.T.S.

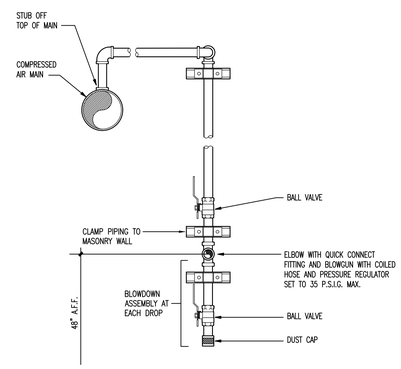

6 / P3.1 TYP. COMPRESSED AIR DROP
N.T.S.

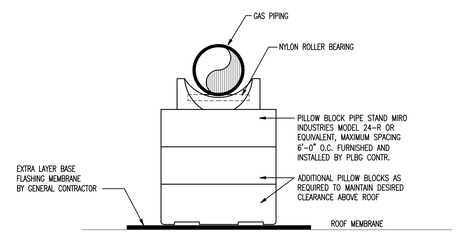

7 / P3.1 L.P. GAS PIPING SUPPORT
N.T.S.

ADDITIONS TO MAINTENANCE FACILITY

5201 NELSON ROAD (MAINTENANCE BLDG)
5210 NELSON ROAD (VACANT LOT)
CARY, NORTH CAROLINA

COMPLETE FACILITIES SOLUTIONS

MOSER MAYER PHOENIX ASSOCIATES, PA
328 E. Market Street
Suite 200
Greensboro, N.C. 27401
Telephone 336-373-9800
Fax 336-373-0077

NORTH CAROLINA PROFESSIONAL SEAL 11244 ENGINEER THOMAS H. PHEENIX

MOSER MAYER PHOENIX ASSOCIATES P.A. CERT. NO. C-784 GREENSBORO, N.C.

THIS DRAWING IS THE PROPERTY OF MOSER MAYER PHOENIX ASSOCIATES, P.A. AND IS NOT TO BE COPIED OR REPRODUCED IN PART OR WHOLE WITHOUT PERMISSION.

MULKEY ENGINEERS & CONSULTANTS
PO Box 33127
Raleigh, NC 27636
(919) 851-1912
(919) 851-1918 (FAX)
WWW.MULKEYINC.COM

RECORD DRAWING DISCLAIMER

TO THE BEST OF OUR KNOWLEDGE, THESE DRAWINGS HAVE BEEN REVISED TO REFLECT CHANGES MADE DURING THE CONSTRUCTION PROCESS, BASED UPON THE MARKED-UP DRAWINGS AND OTHER DATA FURNISHED TO THE ARCHITECT BY THE CONTRACTOR OR CONTRACTORS. THE ARCHITECT DOES NOT ASSURE THE ACCURACY OF THAT INFORMATION OR TAKE RESPONSIBILITY FOR ANY ERROR OR OMISSION INCORPORATED INTO THE DRAWINGS AS A RESULT. THE OWNER IS ADVISED TO OBTAIN INDEPENDENT VERIFICATION PRIOR TO USING THE INFORMATION CONTAINED HEREIN.

REVISIONS

NO.	DATE	DESCRIPTION
	01-26-08	RECORD DRAWINGS

DATE	APRIL 28, 2006
PROJECT NUMBER	05111.00 (05156.00)
SCALE	AS NOTED
DRAWN BY	GMH

PLUMBING DIAGRAMS AND DETAILS

P3.1

DUCTWORK LEGEND – SINGLE/DOUBLE LINE

REFER TO SPECIFICATIONS FOR ADDITIONAL REQUIREMENTS FOR ALL DUCT FITTINGS

SINGLE LINE SYMBOL	DOUBLE LINE REPRESENATATION	DESCRIPTION
		INCREASER/DECREASER (CONCENTRIC) FOT= FLAT ON TOP; FOB= FLAT ON BOTTOM
V.D.	V.D.	RECTANGULAR STANDARD BRANCH (CONVERGING OR DIVERGING) W/ 45° ENTRY/EXIT SUPPLY, RETURN, EXHAUST
V.D. V.D.	V.D. V.D.	RECTANGULAR DOUBLE STANDARD BRANCH (CONVERGING OR DIVERGING) W/ 45° ENTRY/EXIT SUPPLY, RETURN, EXHAUST
V.D.	RIGID OR FLEXIBLE ROUND DUCT	ROUND BRANCH TAKE-OFF FITTING. PROVIDE V.D. WHERE INDICATED. SEE SPECIFICATIONS FOR APPLICATION.
		MITERED RECTANGULAR ELBOW (0 TO 90°) PROVIDE TURNING VANES, UNO. SINGLE THICKNESS FOR LOW PRESSURE DUCT AND DOUBLE THICKNESS FOR MED. PRESSURE DUCT
	R	RADIUS RECTANGULAR ELBOW (0 TO 90°). PROVIDE SPLITTER VANES FOR ALL ELLS WITH A CENTERLINE RADIUS (R) OF LESS THAN 1-1/2 THE DUCT WIDTH.
		ROUND/OVAL GORED ELBOW (0 TO 90°)
		ROUND/OVAL TEE, CONICAL TEE WHERE MAIN DUCT SIZE PERMITS (CONVERGING OR DIVERGING)
		ROUND/OVAL 90° CROSS, CONICAL CROSS WHERE MAIN DUCT SIZE PERMITS (CONVERGING OR DIVERGING)

DUCTWORK – SYMBOLS

- DUCT SIZE (FIRST FIGURE SIDE SHOWN)(DIMENSIONS FOR NET FREE FLOW AREA)
- 3 2 — POINT OF CHANGE IN DUCT CONSTRUCTION (BY STATIC PRESSURE CLASS).
- DUCT LINER (DUCT DIMENSIONS FOR NET FREE FLOW AREA)
- DUCT SECTION, SUPPLY (DIMENSIONS FOR NET FREE FLOW AREA)
- DUCT SECTION, RETURN (DIMENSIONS FOR NET FREE FLOW AREA)
- DUCT SECTION, EXHAUST (DIMENSIONS FOR NET FREE FLOW AREA)
- R — CHANGE OF ELEVATION (RISE [R] – DROP [D])
- FLEXIBLE CONNECTION
- FLEXIBLE DUCT
- F S FS — DETECTORS: FIRE, SMOKE, COMBINATION FIRE/SMOKE
- BDD — BACKDRAFT DAMPER
- M — MOTOR OPERATED DAMPER
- VD — MANUAL VOLUME DAMPER
- FIRE
  - – HORIZONTAL DUCT/VERTICAL DAMPER
  - – VERTICAL DUCT/HORIZONTAL DAMPER
- S — FIRE AND SMOKE (FS), SMOKE (S), RADIATION (R)
- R — HEAT STOP/RADIATION DAMPER FOR FIRE RATED CEILING

SPECIALTY SYMBOLS

- M-1 — MECHANICAL BID ALTERNATE
- DS — DISCONNECT SWITCH
- HOA — HAND-OFF-AUTO SWITCH (STARTER)
- ES — EMERGENCY STOP SWITCH
- 1 — KEYED CONSTRUCTION/RENOVATION NOTE
- 1 — KEYED DEMOLITION NOTE
- CONNECT TO EXISTING
- POINT OF DISCONNECTION
- C (TAG) — CARBON DIOXIDE SENSOR
- H (TAG) — HUMIDITY SENSOR
- T (TAG) — THERMOSTAT/TEMP. SENSOR
- S — SOLENOID ACTUATOR
- M — MOTOR ACTUATOR
- UC 1/2" — UNDERCUT DOOR

AIR DISTRIBUTION SYMBOLS

SD-A — TAG (REFER TO AIR DISTRIBUTION SCEDULE)
12x12 — NECK SIZE, INCHES (*)
350 — CFM
* FOR SLOTS (X/XX/XXX)
X – NUMBER OF SLOTS
XX – NECK SIZE (INCHES)
XXX – SLOT LENGTH
(24 = 24"; 48 = 48")

DG 12x12 — DOOR GRILLE

PIPING – LINETYPES

HEATING

HWS	HOT WATER SUPPLY
HWR	HOT WATER RETURN
LPS	LOW PRESSURE STEAM
MPS	MEDIUM PRESSURE STEAM
HPS	HIGH PRESSURE STEAM
LPC	LOW PRESSURE CONDENSATE
PC	PUMPED CONDENSATE

AIR CONDITIONING AND REFRIGERATION

CHS	CHILLED WATER SUPPLY
CHR	CHILLED WATER RETURN
CWS	CONDENSER WATER SUPPLY
CWR	CONDENSER WATER RETURN
RD	REFRIGERANT DISCHARGE
RL	REFRIGERANT LIQUID
RS	REFRIGERANT SUCTION

MISCELLANEOUS

CA	COMPRESSED AIR
G	GAS
CD	CONDENSATE DRAIN
DW	DOMESTIC WATER SUPPLY
MU	MAKEUP WATER

WALL/RATING SYMBOLS

- 1 HOUR RATED FIRE WALL/PARTITION
- 2 HOUR RATED FIRE WALL/PARTITION

PIPING – VALVES

- CHECK, SWING GATE
- NS — CHECK, SPRING & WAFER LIFT, NON-SLAM
- HOSE VALVE
- HOSE END BALL VALVE
- G — GAS COCK
- A — AIR COCK
- NO — BALL (NORMALLY OPEN)
- NC — BALL (NORMALLY CLOSED, VALVE BLACKED IN. TYPICAL FOR ALL VALVE TYPES).
- BUTTERFLY
- GATE
- GLOBE
- PLUG

PIPING – SPECIALTIES

- ALIGNMENT GUIDE
- ANCHOR
- ANCHOR, MAIN
- BALL JOINT
- EXPANSION LOOP
- EJ-1 — EXPANSION JOINT
- FLEXIBLE CONNECTOR
- WYE-TYPE STRAINER
- WYE-TYPE STRAINER WITH BLOWDOWN
- FE — FLOWMETER, AS SPECIFIED
- VFM-1 — FLOWMETER, VENTURI

PIPING – FITTINGS

- CAP
- CROSS
- ELBOW, 90°
- ELBOW, 45°
- ELBOW, DOUBLE BRANCH
- LR — ELBOW, LONG RADIUS
- 4 2 — ELBOW, REDUCING
- ELBOW, SIDE OUTLET UP
- ELBOW, SIDE OUTLET DOWN
- ELBOW, TURNED DOWN
- ELBOW, TURNED UP
- LATERAL
- REDUCER, CONCENTRIC
- REDUCER, ECCENTRIC STRAIGHT CROWN (WATER)
- REDUCER, ECCENTRIC STRAIGHT INVERT (STEAM)
- RISE OR DROP
- TEE
- TEE, OUTLET UP
- TEE, OUTLET DOWN
- 2 6 4 — TEE, REDUCING
- TEE, SIDE OUTLET DOWN
- TEE, SIDE OUTLET UP
- TEE, SINGLE SWEEP
- UNION

PROJECT: ADDITIONS TO MAINTENANCE FACILITY, TTA

MECHANICAL SYSTEMS, SERVICE SYSTEMS AND EQUIPMENT METHOD OF COMPLIANCE

PRESCRIPTIVE ___X___ ENERGY COST BUDGET ________

ASHRAE 90.1, 2001 APPENDIX D- T. B-13

EXTERIOR DESIGN CONDITIONS
WINTER DRY BULB 16 DEG. F
SUMMER DRY BULB 91 DEG. F

INTERIOR DESIGN CONDITIONS
WINTER DRY BULB 70 DEG. F
SUMMER DRY BULB 75 DEG. F
RELATIVE HUMIDITY 50 %

BUILDING HEAT LOAD 91.4 MBH (INCLUDING O/A LOAD FOR NEW OFFICE ADDITION ONLY)
BUILDING COOLING LOAD 177.2 MBH (INCLUDING O/A LOAD FOR NEW OFFICE ADDITION ONLY)

MECHANICAL SPACING CONDITIONING SYSTEM:
UNITARY
DESCRIPTION: PACKAGED ROOF TOP UNITS WITH LP GAS HEATING AND SPLIT SYSTEM HEAT PUMP FOR NEW OFFICE ADDITION AND DUCTLESS SPLIT SYSTEM UNITS FOR DATA/COMPUTER ROOMS.

EFFICIENCIES AND OUTPUTS:	RTU-1	RTU-2	AHU-1/HP-1	AC-4/CU-4	AC-8/CU-8
HEATING EFFICIENCY:	81% (LPG)	81% (LPG)	7.7 HSPF	N/A	N/A
COOLING EFFICIENCY:	10.2 EER	10.1 EER	10.8 SEER	10.2 SEER	10.2 SEER
HEAT OUTPUT OF UNIT:	97.2 MBH	121.5 MBH	29.6 MBH	N/A	N/A
COOLING OUTPUT OF UNIT:	67.0 MBH	83.4 MBH	32.2 MBH	34.0 MBH	8.5 MBH

BOILER: N/A
CHILLER: N/A

LIST OF EQUIPMENT EFFICIENCIES: IFH-1A, 1B, 1C & 1D
BOILER: -
CHILLER: -
GAS FIRED UNIT HEATERS: 83%

EQUIPMENT SCHEDULES WITH MOTORS (MECHANICAL SYSTEMS)			
SERVICE:	RTU-1	RTU-2	EF-25
MOTOR HP:	1	2	2
NO. OF PHASES:	3	3	3
MIN. EFFICIENCY:	82.50%	84%	84%
MOTOR TYPE:	TEFC	TEFC	TEFC
# OF POLES:	4	4	4

DESIGNER STATEMENT:

TO THE BEST OF MY KNOWLEDGE AND BELIEF, THE DESIGN OF THIS BUILDING COMPLIES WITH THE MECHANICAL SYSTEMS, SERVICE SYSTEMS AND EQUIPMENT REQUIREMENTS OF ASHRAE 90.1-2001 EDITION

SIGNED: ______________________
NAME: THOMAS H. PHOENIX, PE
TITLE: PRINCIPAL

ABBREVIATIONS

#	POUND, NUMBER
%	PERCENT
<	LESS THAN
=	EQUALS
>	GREATER THAN
@	AT
~	APPROXIMATELY
A	AIR, ANCHOR, COMPRESSED AIR
A/E	ARCHITECT/ENGINEER
AAV	AUTOMATIC AIR VENT
ABV	ABOVE
ACC	AIR COOLED CONDENSER
ACH	AIR CHANGES PER HOUR
ACLC	AIR COOLED LIQUID CHILLER
ACT	ACOUSTICAL CEILING TILE
ACU	AIR CONDITIONING UNIT
AD	ACCESS DOOR, AIR DISTRIBUTION
ADA	AMERICANS WITH DISABILITIES ACT
ADJ	ADJUSTABLE
AF	AIR FOIL
AFC	ABOVE FINISHED CEILING
AFCV	AUTOMATIC FLOW CONTROL VALVE
AFD	ADJUSTABLE FREQUENCY DRIVE
AFF	ABOVE FINISHED FLOOR
AFG	ABOVE FINISHED GRADE
AFMS	AIR FLOW MEASURING STATION
AGA	AMERICAN GAS ASSOCIATION
AHU	AIR HANDLING UNIT
AMB	AMBIENT
AMCA	AIR MOVEMENT AND CONTROL ASSOCIATION
AMP	AMPERE
ANSI	AMERICAN NATIONAL STANDARDS INSTITUTE
AP	ACCESS PANEL
APD	AIR PRESSURE DROP
APPROX	APPROXIMATE
ARI	AIR CONDITIONING AND REFRIGERATION INSTITUTE
AS	AIR SEPARATOR
ASHRAE	AMERICAN SOCIETY OF HEATING, REFRIGERATION, AND AIR CONDITIONING ENGINEERS
ASJ	ALL SERVICE JACKET
ASME	AMERICAN SOCIETY OF MECHANICAL ENGINEERS
ASTM	AMERICAN SOCIETY FOR TESTING AND MATERIALS
ATT	ATTENUATOR
AUX	AUXILIARY
AVG	AVERAGE
B	BOILER
BAS	BUILDING AUTOMATION SYSTEM
BC	BACKWARD CURVED
BFC	BELOW FINISHED CEILING
BFF	BELOW FINISHED FLOOR
BFG	BELOW FINISHED GRADE
BHP	BRAKE HORSEPOWER
BI	BACKWARD INCLINED
BLDG	BUILDING
BOD	BOTTOM OF DUCT
BOP	BOTTOM OF PIPE
BTU	BRITISH THERMAL UNIT
BTUH	BRITISH THERMAL UNIT PER HOUR
BV	BUTTERFLY VALVE
C	COMMON
CC	COOLING COIL
C/C	CENTER TO CENTER
CAV	CONSTANT AIR VOLUME
CFH	CUBIC FEET PER HOUR
CH	CUBIC FEET PER MINUTE
CFM	CABINET HEATER
CHR	CHILLED WATER RETURN
CHS	CHILLED WATER SUPPLY
CI	CAST IRON
CKT	CIRCUIT
CL	CENTERLINE
CLG	CEILING
CMPR	COMPRESSOR
CMU	CONCRETE MASONRY UNIT
CO	CLEAN OUT, CARBON MONOXIDE
COM	COMMUNICATION LINK
CONC	CONCRETE
COND	CONDENSATE
CONN	CONNECTION
CONT	CONTINUED
COP	COEFFICIENT OF PERFORMANCE
CRU	COMPUTER ROOM UNIT
CT	COOLING TOWER
CTR	CONDENSER WATER RETURN
CTS	CONDENSER WATER SUPPLY
CU FT	CUBIC FEET
CU IN	CUBIC INCH
CU	CONDENSING UNIT
Cv	VALVE FLOW COEFFICIENT
CV	CONTROL VALVE
CW	COLD WATER
D	DRAIN, DROP
DAT	DISCHARGE AIR TEMPERATURE
DB	DRY BULB
dB	DECIBELS
DC	DIRECT CURRENT
DDC	DIRECT DIGITAL CONTROL
DEG	DEGREE
DG	DOOR GRILLE
DHC	DUCT MOUNTED HEATING COIL
DIA	DIAMETER
DN	DOWN
DOE	DEPARTMENT OF ENERGY
DSAC	DUCTLESS SPLIT AIR CONDITIONER (EVAPORATOR)
DSHP	DUCTLESS SPLIT HEAT PUMP (EVAPORATOR)
DWDI	DOUBLE WIDTH DOUBLE INLET
DWG	DRAWING
DWV	DRAIN WASTE VENT
DX	DIRECT EXPANSION
E	ELECTRIC
EA	EXHAUST AIR, EACH
EAT	ENTERING AIR TEMPERATURE
EER	ENERGY EFFICIENCY RATIO
EF	EXHAUST FAN
EFF	EFFICIENCY
EJ	EXPANSION JOINT
ELEV	ELEVATION
EPA	ENVIRONMENTAL PROTECTION AGENCY
EQUIP	EQUIPMENT
ESP	EXTERNAL STATIC PRESSURE
ET	EXPANSION TANK
EVAP	EVAPORATOR
EWT	ENTERING WATER TEMPERATURE
EXT	EXTERNAL
F	FAN, FAHRENHEIT
FACP	FIRE ALARM CONTROL PANEL
FBO	FURNISHED BY OWNER
FC	FORWARD CURVED
FCU	FAN COIL UNIT
FD	FIRE DAMPER, FLOOR DRAIN
FDC	FLEXIBLE DUCT CONNECTION
FFE	FINISHED FLOOR ELEVATION
FH	FUMEHOOD
FLA	FULL LOAD AMPS
FLR	FLOOR
FM	FACTORY MUTUAL, FREQUENCY MODULATION
FOB	FLAT ON BOTTOM
FOT	FLAT ON TOP
FPF	FINS PER FOOT
FPI	FINS PER INCH
FPM	FEET PER MINUTE
FPS	FEET PER SECOND
FT	FLOAT & THERMOSTATIC
FWE	FURNISHED WITH EQUIPMENT
G	GAS
GA	GAGE OR GAUGE
GAL	GALLON(S)
GIH	GRAVITY INTAKE HOOD
GPH	GALLONS PER HOUR
GPM	GALLONS PER MINUTE
GRH	GRAVITY RELIEF HOOD
GV	GATE VALVE
H	HUMIDISTAT, HUMIDIFIER
HB	HOSE BIBB
HC	HEATING COIL
HD	HEAD
HOA	HAND-OFF-AUTOMATIC SWITCH
HORIZ	HORIZONTAL
HP	HEAT PUMP, HORSEPOWER
HPS	HIGH PRESSURE STEAM
HR	HOUR, HEAT RECOVERY
HTG	HEATING
HW	HOT WATER
HWC	HOT WATER HEATING COIL
HWR	HOT WATER RETURN
HWS	HOT WATER SUPPLY
HX	HEAT EXCHANGER
HZ	FREQUENCY (HERTZ)
IAQ	INDOOR AIR QUALITY
IAW	IN ACCORDANCE WITH
IBR	INSTITUTE OF BOILER AND RADIATOR MANUFACTURERS
IN	INCHES
INS	INSULATION
IE	INVERT ELEVATION
IRI	INDUSTRIAL RISK INSURERS
IFH	INFRA-RED TUBE HEATER
J	JUNCTION BOX
KW	KILOWATT
KWH	KILOWATT HOUR
L	LOUVER
LAT	LEAVING AIR TEMPERATURE
LBS	POUNDS
LBS/HR	POUNDS PER HOUR
LPC	LOW PRESSURE CONDENSATE
LPS	LOW PRESSURE STEAM
LRA	LOCKED ROTOR AMPS
LW	SOUND POWER LEVEL
LWT	LEAVING WATER TEMPERATURE
M	MOTOR
MA	MILLIAMP, MIXED AIR
MAT	MIXED AIR TEMPERATURE
MAU	MAKEUP AIR UNIT
MAV	MANUAL AIR VENT
MAX	MAXIMUM
MBH	1000 BTU/HR
MCA	MINIMUM CIRCUIT AMPERES
MCC	MOTOR CONTROL CENTER
MER	MECHANICAL EQUIPMENT ROOM
MHZ	MEGAHERTZ
MIN	MINIMUM
MISC	MISCELLANEOUS
MOCP	MAXIMUM OVERCURRENT PROTECTION
MOD	MOTOR OPERATED DAMPER
MPC	MEDIUM PRESSURE CONDENSATE
MPS	MEDIUM PRESSURE STEAM
N/A	NOT APPLICABLE
NC	NORMALLY CLOSED, NOISE CRITERIA
NEC	NATIONAL ELECTRICAL CODE
NEMA	NATIONAL ELECTRICAL MANUFACTURERS ASSOCIATION
NFPA	NATIONAL FIRE PROTECTION ASSOCIATION
NG	NATURAL GAS
NIC	NOT IN CONTRACT
NO	NORMALLY OPEN, NUMBER
NRC	NOISE REDUCTION COEFFICIENT
NTS	NOT TO SCALE
O & M	OPERATIONS AND MAINTENANCE
OA	OUTSIDE AIR
OAT	OUTSIDE AIR TEMPERATURE
OBD	OUTSIDE AIR UNIT
ODP	OPPOSED BLADE DAMPER
OPNG	OPEN DRIP PROOF
OS&Y	OPENING
OSHA	OUTSIDE SCREW AND YOKE
OAU	OCCUPATIONAL SAFETY AND HEALTH ADMINISTRATION
OZ	OUNCE
P	PUMP, PRESSURE, SOUND PRESSURE
P & T	PRESSURE AND TEMPERATURE
PAC	PACKAGED AIR CONDITIONER
PC	PLUMBING CONTRACTOR, PUMPED CONDENSATE
PD	PRESSURE DROP
PDI	PLUMBING AND DRAINAGE INSTITUTE
PE	PROFESSIONAL ENGINEER
PH	PHASE
PHC	PREHEAT COIL
PPH	POUNDS PER HOUR
PPM	PARTS PER MILLION
PRV	PRESSURE REDUCING VALVE
PSI	POUNDS PER SQUARE INCH
PSIA	POUNDS PER SQUARE INCH ABSOLUTE
PSIG	POUNDS PER SQUARE INCH GAUGE
PTAC	PACKAGED TERMINAL AIR CONDITIONER
PTP	PRESSURE/TEMPERATURE PLUG
PV	PLUG VALVE
QTY	QUANTITY
R	THERMAL RESISTANCE, RADIUS, RELAY, RISE
RA	RETURN AIR
RAF	RETURN AIR FAN
RAT	RETURN AIR TEMPERATURE
RC	ROOM CRITERIA (NOISE RATING)
REF	REFERENCE
REQ'D	REQUIRED
RH	RELATIVE HUMIDITY
RHC	REHEAT COIL
RL	REFRIGERANT LIQUID
RLA	RUNNING LOAD AMPS
RM	ROOM
RPBP	REDUCED PRESSURE BACKFLOW PREVENTER
RPM	REVOLUTIONS PER MINUTE
RS	REFRIGERANT SUCTION
RT	ROOM TEMPERATURE
RTU	ROOF TOP UNIT
S	STEAM
S/S	START/STOP
SA	SUPPLY AIR, SOUND ATTENUATOR
SAF	SUPPLY AIR FAN
SAT	SUPPLY AIR TEMPERATURE
SCWCU	SELF-CONTAINED WATER COOLED UNIT
SD	SMOKE DAMPER
SEER	SEASONAL ENERGY EFFICIENCY RATIO
SMACNA	SHEET METAL AND AIR CONDITIONING CONTRACTORS NATIONAL ASSOCIATION
SP	STATIC PRESSURE
SQ	SQUARE
SQ FT	SQUARE FEET
SQ IN	SQUARE INCH
SS	STAINLESS STEEL
STD	STANDARD
SV	SAFETY VALVE
SWSI	SINGLE WIDTH SINGLE INLET
T	THERMOSTAT, TANK, TEMPERATURE
TA	TRANSFER AIR
TAB	TEST AND BALANCE
TC	TEMPERATURE CONTROLLER
TDH	TOTAL DYNAMIC HEAD
TDV	TRIPLE DUTY VALVE
TEFC	TOTALLY ENCLOSED FAN COOLED
TEMP	TEMPERATURE
THK	THICK
TOD	TOP OF DUCT
TOP	TOP OF PIPE
TP	TOTAL PRESSURE
TU	TERMINAL UNIT
TYP	TYPICAL
U	HEAT TRANSFER COEFFICIENT
UC	UNDERCUT
UG	UNDERGROUND
UH	UNIT HEATER
UL	UNDERWRITERS LABORATORY
UNO	UNLESS NOTED OTHERWISE
UPS	UNINTERUPTED POWER SUPPLY
UV	UNIT VENTILATOR, ULTRAVIOLET
V	VOLTS, SANITARY VENT, VALVE
VA	VOLT AMPS
VAC	VOLTS ALTERNATING CURRENT
VAV	VARIABLE AIR VOLUME
VD	VOLUME DAMPER
VEL	VELOCITY
VOL	VOLUME
VP	VELOCITY PRESSURE
W	WATTS
W/O	WITHOUT
WB	WET BULB
WC	WATER COLUMN
WCLC	WATER COOLED LIQUID CHILLER
WG	WATER GAGE
WPD	WATER PRESSURE DROP
WT	WEIGHT
WWF	WELDED WIRE FABRIC
XFMR	TRANSFORMER

MECHANICAL GENERAL NOTES

1. PROVIDE ALL MATERIALS AND LABOR NECESSARY FOR COMPLETE AND PROPERLY FUNCTIONING MECHANICAL SYSTEMS.
2. WARRANTY ALL WORK AND ALL MATERIALS, EQUIPMENT AND DEVICES FOR A PERIOD OF ONE YEAR AFTER THE OWNERS ACCEPTANCE. PROVIDE EXTENDED PARTS WARRANTY ON ALL COMPRESORS FOR YEARS TWO THROUGH FIVE. DELIVERY DATES AND START-UP DATES SHALL NOT BE USED AS A BASIS OF WARRANTY START PERIODS.
3. WORK AS A MINIMUM SHALL CONFORM TO AND MEET THE REQUIREMENTS OF:

   STATE OF NORTH CAROLINA BUILDING CODES, 2002 EDITION, ALL VOLUMES
   NFPA 90A AND 90B, 1999
   NFPA 101, CURRENT EDITION
   NFPA 96, CURRENT EDITION
   NFPA 91, 1999
   NFPA 70 (NATIONAL ELECTRIC CODE), CURRENT EDITION
   ASHRAE STANDARD 15-2004
   ASHRAE STANDARD 55-1992
   ASHRAE STANDARD 62-2001
   ASHRAE STANDARD 90.1-2001
   ASHRAE GUIDELINE 4-1993
   SMACNA; HVAC AIRDUCT LEAKAGE TEST MANUAL, 1985, 1ST EDITION
   SMACNA; HVAC DUCT CONSTRUCTION STANDARDS METAL & FLEXIBLE, 1985, 1ST EDITION
   SMACNA; FIBROUS GLASS DUCT CONSTRUCTION STANDARDS, 1992, 6TH EDITION
   SMACNA; FIRE, SMOKE & RADIATION DAMPER INSTALLATION GUIDE FOR HVAC SYSTEMS, 1992, 4TH EDITION
   UNDERWRITERS LABORATORIES, INCLUSIVE OF UL 555 AND 555S, CURRENT EDITIONS

4. DRAWINGS ARE DIAGRAMMATIC IN NATURE AND ARE NOT INTENDED TO BE SCALED FOR DIMENSIONS, UNLESS DIMENSIONED.
5. ALL MATERIALS, EQUIPMENT AND DEVICES SHALL., AS A MINIMUM, MEET THE REQUIREMENTS OF UL WHERE UL STANDADS ARE ESTABLISHED FOR THOSE ITEMS. ALL ITEMS SHALL BE CLASSIFIED BY UL AS SUITABLE FOR THE PURPOSE USED.
6. ALL ITEMS SHALL BE NEW, UNLESS NOTED OTHERWISE.
7. ALL MATERIALS, EQUIPMENT AND DEVICES SHALL BE CURRENT PRODUCTS BY MANUFACTURERS REGULARLY ENGAGED IN THE PRODUCTION OF SUCH PRODUCTS.
8. ALL MECHANICAL EQUIPMENT SHALL HAVE A FACTORY APPLIED PAINTING.
9. COORDINATE LOCATION OF MECHANICAL WORK WITH OTHER TRADES TO AVOID CONFLICTS AND INTERFERENCE.
10. COORDINATE THE EXACT LOCATION OF AIR DEVICES WITH THE ARCHITECTURAL REFLECTED CEILING PLANS. CONFLICTS/DEVIATIONS SHALL BE BROUGHT TO THE ATTENTION OF THE A/E.
11. INSTALL ALL EQUIPMENT AND MATERIAL IN ACCORDANCE WITH MANUFACTURER'S IOM INSTRUCTIONS.
12. COORDINATE WITH AND OBTAIN PERMITS AND INSPECTIONS FROM AUTHORITY HAVING JURISDICTION AND INCLUDE ALL FEES IN BID.
13. PROVIDE OWNER WITH CERTIFICATES OF FINAL INSPECTION AND ACCEPTANCE FROM AUTHORITY HAVING JURISDICTION.
14. MAKE CONNECTIONS FROM MECHANICAL EQUIPMENT TO DUCTWORK USING FLEXIBLE DUCT CONNECTIONS.
15. ALL EQUIPMENT, PIPE, DUCTWORK ABOVE CEILING SHALL BE SUPPORTED FROM BUILDING STRUCTURE ABOVE, UNO.
16. WHERE PIPES AND DUCTWORK PENETRATE FIRE RATED BARRIERS (WALLS, FLOORS AND CEILINGS) PROTECT AND SEAL OPENING AROUND PIPES AND DUCTWORK WITH U.L. LISTED FIRE STOPPING MATERIAL AND SYSTEMS TO MAINTAIN THE FIRE RATING OF THE BARRIER.
17. DUCT SIZES INDICATED ARE NET FREE INSIDE DIMENSIONS.
18. TOP OF ADJUSTABLE THERMOSTATS AND SWITCHES SHALL 48 INCHES ABOVE FINISHED FLOOR.
19. TOP OF SENSORS SHALL BE 60 INCHES ABOVE FINISHED FLOOR, UNLESS LOCATED NEXT TO AN ADJACENT THERMOSTAT OR SWITCH THAT IS AT 48" AFF.
20. THE CONTRACTOR IS RESPONSIBLE FOR PROVIDING ANY ADDITIONAL DROPS, TURNS, OR TRANSITIONS NOT SHOWN BUT REQUIRED FOR A COMPLETE INSTALLATION OF THE DUCTWORK AND PIPING.
21. VERIFY ALL EQUIPMENT CONNECTIONS WITH THE MANUFACTURER'S CERTIFIED DRAWINGS. VERIFY AND PROVIDE DUCT TRANSITIONS TO FURNISHED EQUIPMENT. FIELD VERIFY AND COORDINATE ALL DIMENSIONS BEFORE FABRICATION.
22. FLEXIBLE DUCT CONNECTING TO THE MAIN OR BRANCH DUCT TO SUPPLY DIFFUSERS OR AIR BOOTS SHALL NOT EXCEED 6 FEET IN LENGTH. IF THE DISTANCE EXCEEDS THE LIMIT, AN INSULATED METAL DUCT OF THE REQUIRED LENGTH AND EQUAL DIAMETER SHALL BE INSTALLED. IF FLEXIBLE DUCT IS TO BE USED TO MAKE A CHANGES IN DIRECTION PROVIDE A RADIUS OF 1.5 TIMES THE DIAMETER OF THE DUCT AND PROVIDE AN ELBOW BRACE IN ACCORDANCE WITH SECTION 15810B. FLEXIBLE DUCTWORK IMPROPERLY INSTALLED WILL BE REQUIRED TO BE REMOVED AND RE-INSTALLED SUCH THAT IT MEETS THE INTENT OF THE CONTRACT DOCUMENTS AT THE MECHANICAL CONTRACTORS EXPENSE.
23. THE INSIDE OF ALL DUCTWORK VISIBLE THROUGH A DIFFUSER AND/OR GRILLE SHALL BE PAINTED FLAT BLACK.
24. REFER TO TYPICAL DETAILS FOR PIPING AND INSTALLATION OF EQUIPMENT.
25. SMOKE DETECTORS SHALL BE FURNISHED AND WIRED BY THE ELECTRICAL CONTRACTOR. MECHANICAL CONTRACTOR SHALL BE RESPONSIBLE FOR MOUNTING OF SMOKE DETECTORS IN DUCTWORK AND PROVIDING ACCESS DOORS.
26. BALANCING DAMPERS SHALL BE INSTALLED IN ALL BRANCH LINES TO SUPPLY, RETURN, AND EXHAUST DIFFUSER/GRILLES AND DUCTED OUTSIDE AIR INTAKES.
27. CONTRACTOR SHALL PREPARE AND SUBMIT COORDINATION DRAWINGS SHOWING ALL DUCTWORK, UTILITIES, STRUCTURAL, PIPING, CONDUIT AND OTHER INTERFERENCES, BEFORE BEGINNING INSTALLATION. SEE SPECS FOR DETAILED SHOP DRAWING REQUIREMENTS.
28. ALL DUCT LAYOUTS ARE GENERALLY DIAGRAMATIC. CONTRACTOR SHALL VERIFY AVAILABLE SPACE FOR INDICATED DUCTS BASED ON SUBMITTED COORDINATION DRAWINGS, ACTUAL EQUIPMENT BEING INSTALLED, FIELD MEASUREMENTS AND SURVEYS OF THE CONSTRUCTION CONDITIONS.
29. CONTRACTOR SHALL COORDINATE LOCATIONS OF ALL DUCT AND PIPING TO INTERFACE WITH PLUMBING, FIRE PROTECTION, ELECTRICAL, CONTROLS, STRUCTURAL AND AL OTHER WORK, EXISTING OR NEW. SEE SPECS FOR ADDITIONAL INFORMATION.
30. COORDINATE DUCTWORK ROUTING AND SIZES WITH PIPING, CONDUIT, STRUCTURES AND OTHER INTERFERENCES TO AVOID CONFLICTS. IF SIZES MUST BE CHANGED, USE EQUAL FRICTION METHOD FOR DETERMINING NEW SIZE. ALL CHANGES REQUIRED FOR DUCT SIZING SHALL BE IAW SMACNA CONSTRUCTION GUIDELINES AS REFERENCED ELSEWHERE IN THESE NOTES AND SPECIFICATIONS.
31. TO PROVIDE ADEQUATE CLEARANCE WHERE DUCTS ARE EXTREMELY TIGHT, LOCATE FLANGED JOINTS AND DUCT REINFORCING SO THAT FLANGES AND REINFORCING OCCUR WHERE ADEQUATE SPACE IS AVAILABLE.
32. CONTRACTOR SHALL FURNISH AND INSTALL ACCESS DOORS IN DUCTWORK AND HARD CEILINGS AS REQUIRED FOR FIRE/SMOKE DAMPERS, CONTROLS, SMOKE DETECTORS, BALANCING DAMPERS, VALVES, AND THE LIKE AT LOCATIONS RECOMMENDED BY SMACNA AND WHERE REQUIRED BY THE CONTRACT DOCUMENTS AND LOCAL AHJ. ALL ACCESS DOORS REQUIRED MAY NOT BE SHOWN ON THE DRAWINGS. REFER TO THE SPECIFICATIONS FOR ADDITIONAL INFORMATION.
33. LOCATE ALL CONTROL VALVES, VAV BOXES, DAMPER HANDLES AND THE LIKE IN ACCESSIBLE POSITIONS WITH ADEQUATE MAINTENANCE CLEARANCE. COORDINATE AND LOCATE DEVICES SO LIGHTS, GRILLES, DUCTWORK, PIPING, STRUCTURE, CONDUIT AND THE LIKE DO NOT RESTRICT ACCESS. VALVES AND OTHER DEVICES REQUIRING ACCESS TO THAT ARE LOCATED IN CHASES OR WALLS OR ABOVE HARD CEILINGS SHALL BE PROVIDED WITH APPROPRIATELY SIZED ACCESS PANELS COMPATIBLE WITH THE SURROUNDING FINISHES. ACCESS PANELS FOR INSTALLATION IN OTHER THAN DUCTWORK SHALL BE INSTALLED BY THE GENERAL CONTRACTOR. ALL ACCESS PANELS SPECIFICED, REQUIRED AND ASSOCIATED WITH DIVISION 15B WORK SHALL BE PROVIDED BY THE DIVISION 15B CONTRACTOR. REFER TO THE MECHANICAL SPECIFICATIONS FOR TYPES AND SIZING REQUIREMENTS.
34. MAINTAIN A MINIMUM OF 12-INCHES OF CLEARANCE FOR ACCESS TO CONTROLS ON ALL TERMINAL BOXES, CONTROL VALVES AND THE LIKE.
35. EQUIPMENT CONNECTION SIZES, ELEVATION AND CONFIGURATIONS ARE SUBJECT TO CHANGE WHEN CERTIFIED VENDOR SHOP DRAWINGS ARE RECEIVED. CONTRACTOR SHALL CHECK CERTIFIED SHOP DRAWINGS PRIOR TO INSTALLATION OF DUCTWORK AND PIPING AND SHALL MAKE REQUIRED ADJUSTMENTS AT NO ADDIITONAL COST TO THE OWNER.
36. EQUIPMENT SELECTIONS AND MATERIAL SCHEDULED ON THE DRAWINGS AND PROVIDED IN THE SPECIFICATIONS INDICATE A MINIMUM LEVEL OF ACCEPTABILITY, INCLUSIVE OF PERFORMANCE. SUBSTITUTION OF EQUIPMENT AND MATERIAL SHALL BE MADE IAW THE MOST STRINGENT REQUIREMENT OF THE SPECIFICATIONS AS PROVIDED FOR IN DIVISION 15B AND THE GENERAL CONDITIONS.
37. ALL PIPE ELEVATIONS INDICATED ARE TO THE BOTTOM OF THE PIPE (NOT INSULATION), UNO.
38. DIVISION 15B CONTRACTOR SHALL CLOSELY COORDINATE WITH THE GENERAL CONTRACTOR TO VERIFY THAT ADEQUATE OPENINGS ARE PROVIDED IN THE BUILDING STRUCTURAL SYSTEMS AND SLABS TO ALLOW FOR THE INSTALLATION OF MECHANICAL DUCTWORK AND PIPING SYSTEMS.
39. GENERAL CONTRACTOR SHALL BE RESPONSIBLE FOR LEADING AND ACHIEVING COORDINATION OF ALL TRADES, SO THAT ALL WORK WILL FIT AND CAN BE PROPERLY INSTALLED BY OTHER TRADE CONTRACTORS. GENERAL CONTRACTOR SHALL BE RESPONSIBLE FOR OBTAINING DETAILED INFORMATION FROM ALL OTHER TRADES TO SHOW LOCATIONS, SIZES AND THE LIKE. COORDINATION DRAWING EFFORTS SHALL BE LEAD BY THE GENERAL CONTRACTOR.
40. MECHANICAL CONTRACTOR SHALL BE RESPONSIBLE FOR VERIFYING IN THE FIELD THAT THE MECHANICAL EQUIPMENT, DUCTWORK AND PIPING FOR THIS PROJECT HAVE BEEN INSTALLED IN A SUCH A MANNER THAT VIBRATIONS WILL NOT BE TRANSMITTED TO THE BUILDING STRUCTURE. THIS SHALL INCLUDE, BUT NOT LIMITED TO AVOIDING CONTACT BETWEEN DUCTWORK, DUCTWORK SUPPORTS, CONDUIT, WALL STUDS, BRACING, PIPING, HANGER SYSTEMS AND THE LIKE. CEILING GRID SUPPORT HANGERS SHALL NOT BE SUSPENDED FROM DUCTOWRK, PIPING OR THEIR SUPPORTS.
41. THE GENERAL CONTRACTOR SHALL PROVIDE ALL PAINTING. THE MECHANICAL CONTRACTOR SHALL COVER AND PROTECT ALL MECHANICAL CONTRACT EQUIPMENT, PANELS, CONTROLS, INSTRUMENTATION, MOTORS, SYSTEMS AND COMPONENTS THAT MAY BE DAMAGED, OBSCURED, OR COVERED BY THE ACTIVITIES OF THE GENERAL CONTRACTOR. UNPROTECTED ITEMS THAT BECOME DAMAGED IN THE OPINION OF THE A/E SHALL BE REPLACED NOT REPAIRED AT THE MECHANICAL CONTRACTORS EXPENSE. PROTECTED ITEMS THAT BECOME DAMAGED BY THE PAINTING ACTIVITIES OF THE GENERAL CONTRACTOR IN THE OPINION OF THE A/E SHALL BE REPLACED NOT REPAIRED AT THE GENERAL CONTRACTORS EXPENSE.
42. ANY SUBDIVISIONS OF THE DRAWINGS OR SPECIFICATIONS ARE NOT INTENDED TO ESTABLISH SUBDIVISION OF WORK, SUCH AS LIMITS OF A SUBCONTRACTORS WORK OR TRADE JURISDICTION.
43. DUCTWORK THAT WILL BE SUBJECTED TO RECIRCULATED AIRFLOW SHALL BE PROTECTED FROM DIRT AND DEBRIS THAT IS PREVALENT AT THE CONSTRUCTION JOB SITE.
44. PROVIDE APPROVED PROTECTION WHILE THE HVAC DUCTWORK, PIPING AND EQUIPMENT IS STORED AT THE SITE AND AFTER IT IS INSTALLED. REFER TO THE SPECIFICATIONS FOR DETAILED PROTECTION REQUIREMENTS.
45. REFER TO THE SPECIFICATIONS FOR ADDITIONAL REQUIREMENTS OF THIS PROJECT THAT MAY NOT BE INDICATED ON THE DRAWINGS. THE DRAWINGS AND SPECIFICATIONS ARE DEEMED COMPLIMENTARY TO EACH OTHER TO FORM THE COMPLETE BASIS FOR THE WORK REQUIRED ON THIS PROJECT.
46. NOT ALL SYMBOLS OR ABBREVIATIONS SHOWN ON THE LEGEND MAY BE APPLICABLE FOR THIS PROJECT.

GENERAL DEMOLITION NOTES

1. ALL EQUIPMENT, DUCTWORK, PIPING, ETC. INDICATED TO BE REMOVED BY KEYED DEMOLITION NOTES IS EXISTING.
2. REMOVAL OF EQUIPMENT, DUCTWORK, PIPING, ETC. IS TO INCLUDE ALL ASSOCIATED HANGERS, SUPPORTS, BRACKETS, CONTROLS, AIR DEVICES, EQUIPMENT FOUNDATION/MOUNTING PADS AND APPURTENANCES PHYSICALLY ATTACHED AT THE COMMENCEMENT OF DEMOLITION, UNLESS NOTED OTHERWISE (UNO).
3. CONCEALED/BURIED PIPING MAY BE ABANDONED IN PLACE SO LONG AS IT DOES NOT INTERFERE WITH NEW WORK, UNO.
4. ALL BUILDING CONSTRUCTION (I.E. WALLS, FLOORS, ETC.) REFERENCED BY KEYED DEMOLITION NOTES IS EXISTING, UNO.
5. ALL PIPE SIZES INDICATED OR ASSUMED ARE APPROXIMATE TO WITHIN 3 PIPE SIZES, UNO, FOR BIDDING PURPOSES.
6. ALL DUCT SIZES INDICATED OR ASSUMED ARE APPROXIMATE TO WITHIN ±3" ON EACH DIMENSION, UNO, FOR BIDDING PURPOSES.
7. LOCATIONS OF EQUIPMENT, DUCTWORK, PIPING, ETC. IS DIAGRAMMATIC ONLY AND IS NOT INTENDED TO SHOW THE EXACT LOCATION.
8. COLD WATER PIPES WITH NO SIZE INDICATED, ASSUME 1-1/2" IN SIZE.
9. HOT WATER PIPES WITH NO SIZE INDICATED, ASSUME 1" IN SIZE.
10. WASTE PIPING WITH NO SIZE INDICATED, ASSUME 4" IN SIZE.
11. VENT PIPING WITH NO SIZE INDICATED, ASSUME 2" IN SIZE.
12. STEAM PIPING WITH NO SIZE INDICATED, ASSUME 2" IN SIZE.
13. CONDENSATE PIPING WITH NO SIZE INDICATED, ASSUME 1" IN SIZE.
14. REFRIGERANT PIPING WITH NO SIZE INDICATED, ASSUME 1-1/2" IN SIZE.
15. DRAIN PIPING WITH NO SIZE INDICATED, ASSUME 1" IN SIZE.
16. CHILLED WATER PIPING WITH NO SIZE INDICATED, ASSUME 6" IN SIZE.
17. CONDENSER WATER PIPING WITH NO SIZE INDICATED, ASSUME 10" IN SIZE.
18. ALL EQUIPMENT REMOVED, NOT INDICATED TO BE REUSED SHALL REMAIN THE PROPERTY OF THE OWNER, UNO, AND SHALL BE TRANSPORTED BY THE CONTRACTOR TO A LOCATION AS DIRECTED BY THE OWNER.
19. ALL PIPING, DUCTWORK AND ASSOCIATED APPURTENANCES INDICATED TO BE DEMOLISHED SHALL BE REMOVED FROM THE SITE BY THE REMOVING CONTRACTOR WITHIN 24 HOURS AFTER REMOVAL OF SUCH ITEMS.
20. EXISTING EQUIPMENT INDICATED TO BE REUSED SHALL BE CLEANED AND SERVICED PRIOR TO REUSE.
21. WHERE EQUIPMENT, DUCTWORK OR PIPING EXPOSED TO VIEW IS REMOVED AND NOT REPLACED, PATCH AND FINISH AREAS TO MATCH ADJACENT SURFACES.
22. ALL WORK SHALL BE ACCOMPLISHED IN A MANNER THAT WILL CAUSE THE LEAST DISRUPTION TO NORMAL BUILDING OPERATIONS.

TTA

ADDITIONS TO MAINTENANCE FACILITY

5201 NELSON ROAD (MAINTENANCE BLDG)
5210 NELSON ROAD (VACANT LOT)
CARY, NORTH CAROLINA

COMPLETE FACILITIES SOLUTIONS

MOSER MAYER PHOENIX ASSOCIATES, PA

328 E. Market Street
Suite 200
Greensboro, N. C. 27401
Telephone 336-373-9800
Fax 336-373-0077

NORTH CAROLINA PROFESSIONAL SEAL 11244 ENGINEER THOMAS H. PHOENIX

MOSER MAYER PHOENIX ASSOCIATES P.A. REGISTERED ENGINEERING CORPORATION CERT. NO. C-784 NORTH CAROLINA GREENSBORO N.C.

THIS DRAWING IS THE PROPERTY OF MOSER MAYER PHOENIX ASSOCIATES, P.A. AND IS NOT TO BE COPIED OR REPRODUCED IN PART OR WHOLE WITHOUT PERMISSION.

MULKEY ENGINEERS & CONSULTANTS
PO BOX 33127
RALEIGH, N.C. 27636
(919) 851-1912
(919) 851-1918 (FAX)
WWW.MULKEYINC.COM

RECORD DRAWING DISCLAIMER

TO THE BEST OF OUR KNOWLEDGE, THESE DRAWINGS HAVE BEEN REVISED TO REFLECT CHANGES MADE DURING THE CONSTRUCTION PROCESS, BASED UPON THE MARKED-UP DRAWINGS AND OTHER DATA FURNISHED TO THE ARCHITECT BY THE CONTRACTOR OR CONTRACTORS. THE ARCHITECT DOES NOT ASSURE THE ACCURACY OF THAT INFORMATION OR TAKE RESPONSIBILITY FOR ANY ERROR OR OMISSION INCORPORATED INTO THE DRAWINGS AS A RESULT. THE OWNER IS ADVISED TO OBTAIN INDEPENDENT VERIFICATION PRIOR TO USING THE INFORMATION CONTAINED HEREIN.

REVISIONS

NO.	DATE	DESCRIPTION
	01-26-08	RECORD DRAWINGS

DATE	APRIL 28, 2006
PROJECT NUMBER	05111.00 (05156.00)
SCALE	AS NOTED
DRAWN BY	SENNATI

GENERAL NOTES, LEGENDS AND ABBREVIATIONS

M0.1

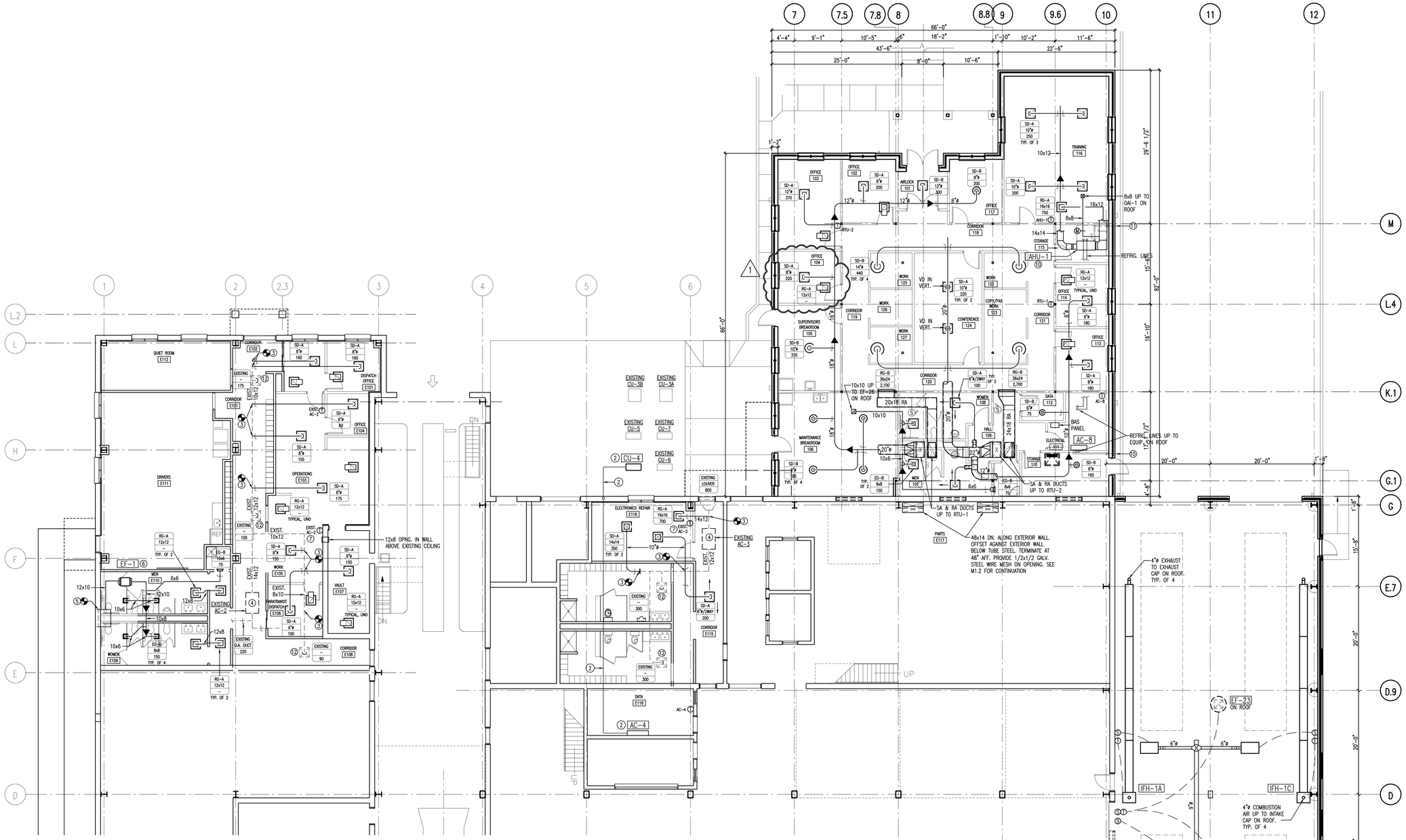

1 / M1.1 HVAC FLOOR PLAN

REFER TO GRAPHIC SCALE

GENERAL NOTES: (THIS DRAWING ONLY)

1. REFER TO ARCHITECTURAL SECTIONS FOR HEIGHTS OF EXPOSED DUCTWORK IN THE NEW OFFICE BULDING ADDITION.

2. DUCT DIMENSIONS SHOWN ON THIS PLAN ARE NET FREE AREA DIMENSIONS. WHERE DUCTWORK IS INDICATED TO BE INTERNALLY INSULATED, THE CONTRACTOR SHALL INCREASE THE DUCTWORK SHEET METAL DIMENSIONS TO ACCOMIDATE THE REQUIRED INTERNAL INSULATION.

3. ALL RECTANGULAR SUPPLY AND RETURN DUCTWORK ASSOCIATED WITH RTU-1, RTU-2 SHALL BE FACTORY FABRICATED DOUBLE WALL, INTERNALLY INSULATED DUCT. ALL ROUND SUPPLY DUCT ASSOCIATED WITH RTU-1 AND RTU-2 SHALL BE FACTORY FABRICATED, DOUBLE WALLED, SPIRAL WOUND DUCT. ALL DUCTWORK, RECTANGULAR AND ROUND, ASSOCIATED WITH RTU-1 AND RTU-2 SHALL BE PROVIDED WITH A PAINT GRIP FINISH SUITABLE FOR FIELD PAINTING.

4. EXHAUST DUCT ASSOCIATED WITH EF-25, BETWEEN THE FAN INLET AND THE VEHICLE EXHAUST REELS SHALL BE FACTORY FABRICATED, SINGLE WALL, SPIRAL WOUND DUCT, CONSTRUCTED FOR A MIN. OF 6 IN. NEGATIVE SP AND A VELOCITY OF 4500 FPM. PROVIDE A PAINT GRIP FINISH SUITABLE FOR FIELD PAINTING.

5. LPG PIPING SHALL BE SCHEDULE 80, BLACK STEEL WITH MALLEABLE IRON FITTINGS. INSTALLATION SHALL COMPLY WITH THE LATEST EDITION OF THE NORTH CAROLINA FUEL GAS CODE AND NFPA 58 AS APPLICABLE.

6. CONDENSATE DRAIN PIPING SHALL BE TYPE "M" COPPER TUBING WITH WROUGHT COPPER FITTINGS. INSULATE CONDENSATE LINE WITH 1/2 INCH, CLOSED CELL INSULATION. INSULATION INSTALLED OUTDOORS SHALL BE COVERED WITH FLEX CLAD 400TM FLEXIBLE SELF ADHERING WEATHER PROOFING SYSTEM AS MANUFACTURED BY MFM BUILDING PRODUCTS CORP OR APPROVED EQUAL.

KEYED NOTES: (THIS DRAWING ONLY)

1. MOTOR OPERATED VEHICLE EXHAUST HOSE REEL ASSEMBLY. SEE SPECIFICATION ON SHEET M3.1.
2. NEW DUCTLESS SPLIT SYSTEM FOR REPLACEMENT OF EXISTING SYSTEM. ROUTE REFRIGERANT PIPING AND CONDENSATE DRAIN PIPING ALONG SAME PATH AS REMOVED PIPING. MOUNT CONDENSING UNIT ON EXISTING CONCRETE PAD.
3. CONNECT NEW DUCTWORK TO EXISTING AT THIS LOCATION. REPAIR/PATCH EXISTING DUCT INSULATION WHERE EXISTING DUCT TAPS WERE REMOVED AND NEW TAPS ARE MADE TO MATCH EXISTING.
4. RE-BALANCE EXISTING AIR SYSTEM, INCLUDING EXISTING/REUSED AIR DEVICES TO INDICATED CFM.
5. PROVIDE A 20" DEEP, INTERNALLY INSULATED PLENUM ON EXISTING 40x20 EXHAUST LOUVER.
6. NEW EXHAUST FAN (EF-1) FOR REPLACEMENT OF EXISTING SYSTEM. RECONNECT TO EXISTING LIGHT SWITCH CONTROL AS EXISTING.
7. RELOCATE EXISTING THERMOSTAT TO THIS NEW LOCATION.
8. SUPPORT HOSE REELS FROM STRUCTURE ABOVE USING STEEL ANGLE IRON FRAME SIMILIAR TO EXISTING HOSE REELS.
9. PROVIDE A STEEL ANGLE IRON SUPPORT BASE FOR EXHAUST FAN AND SUSPEND FROM STRUCTURE ABOVE WITH ALL THREAD HANGING RODS AND OPEN SPRING TYPE VIBRATION ISOLATORS SIMILIAR TO EXISTING EXHAUST FAN.
10. SUPPORT AHU-1 FROM STRUCTURE ABOVE USING ALL THD. HANGING RODS AND OPEN SPRING TYPE VIBRATION ISOLATORS.
11. ROUTE CONDENSATE DRAIN LINE, FULL SIZE OF UNIT OUTLET (1" MINIMUM), TO EXTERIOR WALL AND TURN DOWN ALONG INSIDE OF EXTERIOR WALL AS INDICATED. PENETRATE EXTERIOR WALL AND DRIP 6" ABOVE FINISH GRADE.
12. EXISTING SUPPLY DIFFUSER TO REMAIN. PROVIDE TEMPORARY SUPPORT OF DIFFUSER DURING CEILING REPLACEMENT IN THIS AREA. AT THE CONTRACTORS OPTION THE DIFFUSERS MAY BE REMOVED AND REINSTALLED.
13. PROVIDE NEW FLEXIBLE DUCT CONNECTION FOR EXISTING EXHAUST FAN EF-18. ADJUST DUCT AND FAN ALLIGNMENT TO PREVENT BINDING OF THE NEW FLEXIBLE DUCT CONNECTION.

(PLAN) NORTH

0 4 8 16 24

GRAPHIC SCALE IN FEET 1/8" = 1'-0"

TTA

ADDITIONS TO MAINTENANCE FACILITY

5201 NELSON ROAD (MAINTENANCE BLDG)
5210 NELSON ROAD (VACANT LOT)
CARY, NORTH CAROLINA

COMPLETE FACILITIES SOLUTIONS

MOSER MAYER PHOENIX ASSOCIATES, PA

328 E. Market Street
Suite 200
Greensboro, N.C. 27401
Telephone 336-373-9800
Fax 336-373-0077

NORTH CAROLINA PROFESSIONAL SEAL 11244 ENGINEER THOMAS H. PHOENIX

MOSER MAYER PHOENIX ASSOCIATES P.A. ENGINEERING DESIGN CERT. NO. C-784 NORTH CAROLINA GREENSBORO, N.C.

THIS DRAWING IS THE PROPERTY OF MOSER MAYER PHOENIX ASSOCIATES, P.A. AND IS NOT TO BE COPIED OR REPRODUCED IN PART OR WHOLE WITHOUT PERMISSION.

MULKEY ENGINEERS & CONSULTANTS
PO Box 33127
Raleigh, N.C. 27636
(919) 851-1912
(919) 851-1918 (FAX)
WWW.MULKEYINC.COM

RECORD DRAWING DISCLAIMER

TO THE BEST OF OUR KNOWLEDGE, THESE DRAWINGS HAVE BEEN REVISED TO REFLECT CHANGES MADE DURING THE CONSTRUCTION PROCESS, BASED UPON THE MARKED-UP DRAWINGS AND OTHER DATA FURNISHED TO THE ARCHITECT BY THE CONTRACTOR OR CONTRACTORS. THE ARCHITECT DOES NOT ASSURE THE ACCURACY OF THAT INFORMATION OR TAKE RESPONSIBILITY FOR ANY ERROR OR OMISSION INCORPORATED INTO THE DRAWINGS AS A RESULT. THE OWNER IS ADVISED TO OBTAIN INDEPENDENT VERIFICATION PRIOR TO USING THE INFORMATION CONTAINED HEREIN.

REVISIONS

NO.	DATE	DESCRIPTION
1	01-09-07	RECORD DRAWING ADDITIONS

DATE	APRIL 28, 2006
PROJECT NUMBER	05111.00 (05156.00)
SCALE	AS NOTED
DRAWN BY	SENNATI

HVAC FLOOR PLAN

M1.1

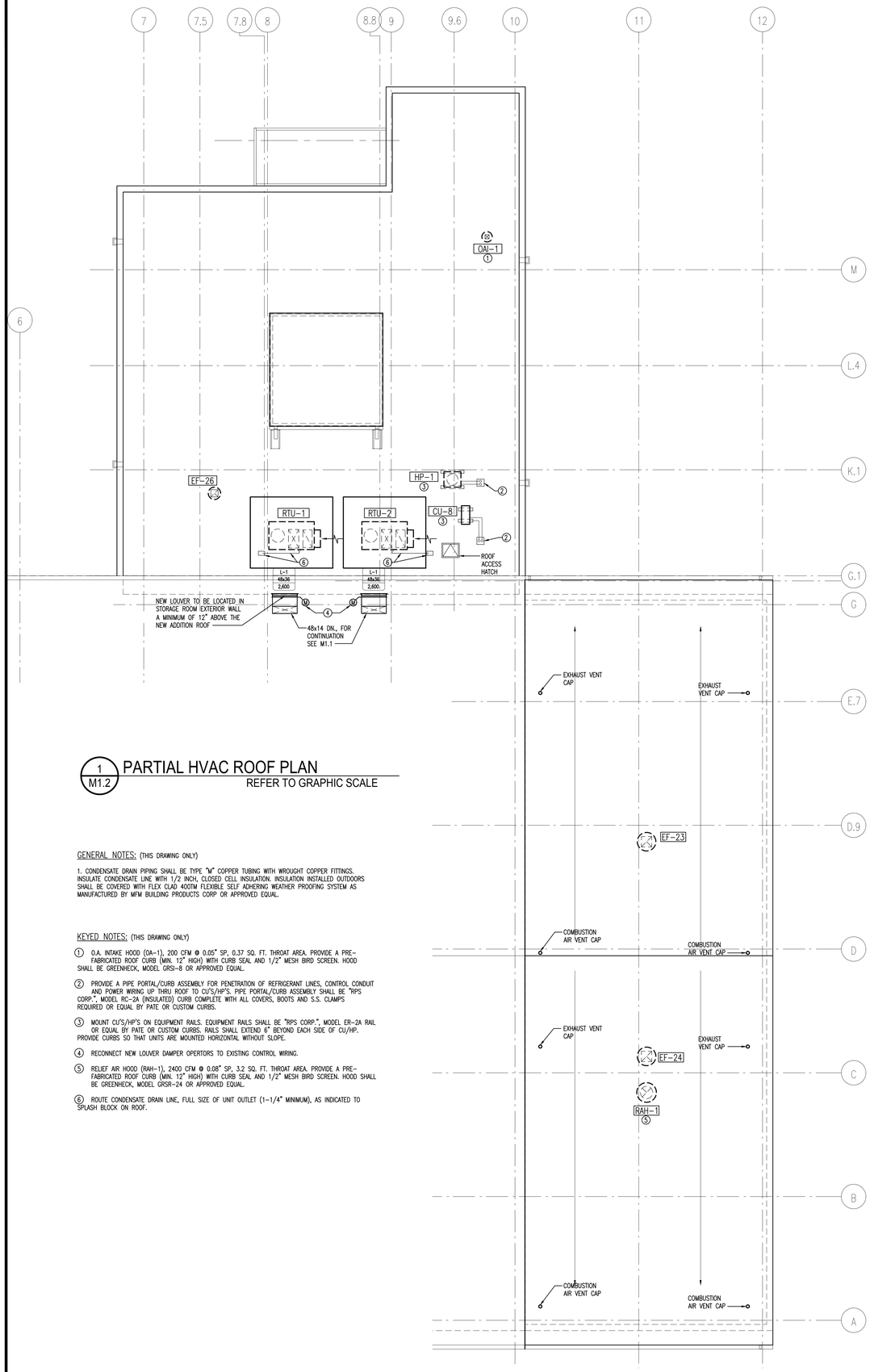

1 / M1.2 PARTIAL HVAC ROOF PLAN

REFER TO GRAPHIC SCALE

GENERAL NOTES: (THIS DRAWING ONLY)

1. CONDENSATE DRAIN PIPING SHALL BE TYPE "M" COPPER TUBING WITH WROUGHT COPPER FITTINGS. INSULATE CONDENSATE LINE WITH 1/2 INCH, CLOSED CELL INSULATION. INSULATION INSTALLED OUTDOORS SHALL BE COVERED WITH FLEX CLAD 400TM FLEXIBLE SELF ADHERING WEATHER PROOFING SYSTEM AS MANUFACTURED BY MFM BUILDING PRODUCTS CORP OR APPROVED EQUAL.

KEYED NOTES: (THIS DRAWING ONLY)

1. O.A. INTAKE HOOD (OA-1), 200 CFM @ 0.05" SP, 0.37 SQ. FT. THROAT AREA. PROVIDE A PRE-FABRICATED ROOF CURB (MIN. 12" HIGH) WITH CURB SEAL AND 1/2" MESH BIRD SCREEN. HOOD SHALL BE GREENHECK, MODEL GRSI-8 OR APPROVED EQUAL.
2. PROVIDE A PIPE PORTAL/CURB ASSEMBLY FOR PENETRATION OF REFRIGERANT LINES, CONTROL CONDUIT AND POWER WIRING UP THRU ROOF TO CU'S/HP'S. PIPE PORTAL/CURB ASSEMBLY SHALL BE "RPS CORP.", MODEL RC-2A (INSULATED) CURB COMPLETE WITH ALL COVERS, BOOTS AND S.S. CLAMPS REQUIRED OR EQUAL BY PATE OR CUSTOM CURBS.
3. MOUNT CU'S/HP'S ON EQUIPMENT RAILS. EQUIPMENT RAILS SHALL BE "RPS CORP.", MODEL ER-2A RAIL OR EQUAL BY PATE OR CUSTOM CURBS. RAILS SHALL EXTEND 6" BEYOND EACH SIDE OF CU/HP. PROVIDE CURBS SO THAT UNITS ARE MOUNTED HORIZONTAL WITHOUT SLOPE.
4. RECONNECT NEW LOUVER DAMPER OPERTORS TO EXISTING CONTROL WIRING.
5. RELIEF AIR HOOD (RAH-1), 2400 CFM @ 0.08" SP, 3.2 SQ. FT. THROAT AREA. PROVIDE A PRE-FABRICATED ROOF CURB (MIN. 12" HIGH) WITH CURB SEAL AND 1/2" MESH BIRD SCREEN. HOOD SHALL BE GREENHECK, MODEL GRSR-24 OR APPROVED EQUAL.
6. ROUTE CONDENSATE DRAIN LINE, FULL SIZE OF UNIT OUTLET (1-1/4" MINIMUM), AS INDICATED TO SPLASH BLOCK ON ROOF.

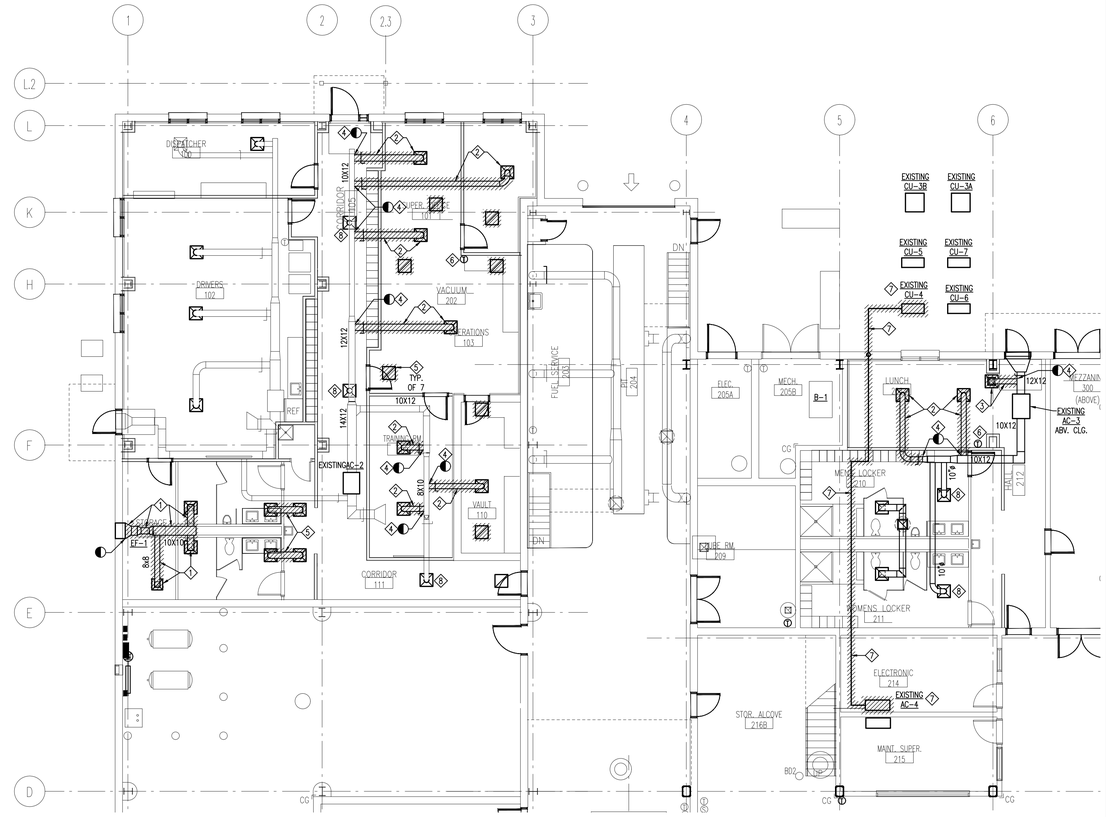

2 / M1.2 PARTIAL HVAC DEMOLITION PLAN

REFER TO GRAPHIC SCALE

GENERAL DEMOLITION NOTE: (THIS DRAWING ONLY)

1. ALL ITEMS SHOWN ON THIS DEMOLITION PLAN ARE TO REMAIN AND BE REUSED UNLESS OTHERWISE INDICATED BY KEYED DEMOLITION NOTES.

KEYED DEMOLITION NOTES: (THIS DRAWING ONLY)

1. EXHAUST FAN, EXHAUST DUCTWORK AND AIR DEVICES TO BE REMOVED. CONTROL CONDUIT AND WIRING TO BE REUSED FOR NEW EXHAUST FAN.
2. REMOVE SUPPLY DUCT BACK TO POINT INDICATED. REMOVE ASSOCIATED SUPPLY AIR DEVICE.
3. REMOVE RETURN DUCT BACK TO POINT INDICATED. REMOVE ASSOCIATED RETURN AIR DEVICE.
4. UNLESS REUSED FOR NEW BRANCH DUCT CONNECTION, CAP OPENING IN MAIN DUCT AIRTIGHT. INSULATE PATCHED AREA TO MATCH EXISTING.
5. RETURN/TRANSFER AIR DEVICES AND DUCTWORK TO BE REMOVED.
6. THERMOSTAT TO BE RELOCATED AND REUSED.
7. EXISTING DUCTLESS SPLIT SYSTEM A/C UNIT, CONDENSING UNIT, REFRIGERANT PIPING AND ALL ASSOCIATED APPURTENANCES TO BE REMOVED.
8. EXISTING SUPPLY DIFFUSER TO REMAIN. PROVIDE TEMPORARY SUPPORT OF DIFFUSER DURING CEILING REPLACEMENT IN THIS AREA. AT THE CONTRACTORS OPTION THE DIFFUSERS MAY BE REMOVED AND REINSTALLED.

(PLAN) NORTH

0 4 8 16 24

GRAPHIC SCALE IN FEET — 1/8" = 1'-0"

TTA

ADDITIONS TO MAINTENANCE FACILITY

5201 NELSON ROAD (MAINTENANCE BLDG)
5210 NELSON ROAD (VACANT LOT)
CARY, NORTH CAROLINA

COMPLETE FACILITIES SOLUTIONS

MOSER MAYER PHOENIX ASSOCIATES, PA

328 E. Market Street
Suite 200
Greensboro, N.C. 27401
Telephone 336-373-9800
Fax 336-373-0077

NORTH CAROLINA PROFESSIONAL SEAL 11244 ENGINEER THOMAS H. PHOENIX

MOSER MAYER PHOENIX ASSOCIATES, P.A. ENGINEERING DESIGN CERT. NO. C-784 NORTH CAROLINA GREENSBORO, N.C.

THIS DRAWING IS THE PROPERTY OF MOSER MAYER PHOENIX ASSOCIATES, P.A. AND IS NOT TO BE COPIED OR REPRODUCED IN PART OR WHOLE WITHOUT PERMISSION.

MULKEY ENGINEERS & CONSULTANTS
PO Box 33127
RALEIGH, N.C. 27636
(919) 851-1912
(919) 851-1918 (FAX)
WWW.MULKEYINC.COM

RECORD DRAWING DISCLAIMER

TO THE BEST OF OUR KNOWLEDGE, THESE DRAWINGS HAVE BEEN REVISED TO REFLECT CHANGES MADE DURING THE CONSTRUCTION PROCESS, BASED UPON THE MARKED-UP DRAWINGS AND OTHER DATA FURNISHED TO THE ARCHITECT BY THE CONTRACTOR OR CONTRACTORS. THE ARCHITECT DOES NOT ASSURE THE ACCURACY OF THAT INFORMATION OR TAKE RESPONSIBILITY FOR ANY ERROR OR OMISSION INCORPORATED INTO THE DRAWINGS AS A RESULT. THE OWNER IS ADVISED TO OBTAIN INDEPENDENT VERIFICATION PRIOR TO USING THE INFORMATION CONTAINED HEREIN.

REVISIONS

NO.	DATE	DESCRIPTION
	01-26-08	RECORD DRAWINGS

DATE	APRIL 28, 2006
PROJECT NUMBER	05111.00 (05156.00)
SCALE	AS NOTED
DRAWN BY	SENNATI

PARTIAL HVAC ROOF PLAN AND PARTIAL DEMO. PLAN

M1.2

SPLIT SYSTEM HEAT PUMP SCHEDULE - AIR COOLED

MARK INDOOR/ OUTDOOR	MANUFACTURER	MODEL - INDOOR UNIT	MODEL - OUTDOOR UNIT	INDOOR FAN SUPPLY CFM	O.A. CFM	ESP IN. W.G.	MOTOR HP	FAN RPM	DRIVE TYPE	INDOOR COOLING TOTAL CAP. MBH	SENS. CAP. MBH	MAX.FACE VEL. - FPM	COIL ROWS	EAT DB/WB	INDOOR HEATING HTG. CAP MBH - HIGH	ELEC. HT KW/STEPS	EAT DB	OUTDOOR CONDENSING NO. COMPR.	TOT. STEPS CAPACITY	COND. FANS NO./HP.EA	EAT DB	SYSTEM DATA/ELECTRICAL INDOOR UNIT MCA	MOCP	V/PH/HZ	OUTDOOR UNIT MCA	MOCP	V/PH/HZ	SEER/EER AT ARI	HSPF AT ARI	NOTES
AHU-1/HP-1	TRANE	TWE030P	2TWA030	950	200	0.40	1/3	-	DIRECT	32.0	22.5	500	4	80/67	29.6	7.2/1	70	1	1	1@1/4	105	37	40	208/3/60	13	20	208/1/60	10.8 EER	7.4	1

THE FOLLOWING APPLY TO THIS SCHEDULE, AS APPLICABLE:
HEAT CAPACITIES SCHEDULED ARE IAW APPLIACABLE ARI STANDARD AT 47 DEGREES DB/43 DEGREES WB.
INDOOR UNIT MCA AND MOCP IS FOR ENTIRE UNIT INCLUDING ELECTRIC HEAT.
NOTES:
1. PROVIDE 2" PLEATED FILTERS, ASHRAE DUST-SPOT EFICIENCY OF 40% AND A MERV LEVEL 8. FILTERS SHALL BE EQUAL TO FLANDERS PRECISIONAIRE 62R.

DUCTLESS SPLIT AIR CONDITIONING UNITS

DRAWING TAG	AC-4/CU-4	AC-8/CU-8	
MANUFACTURER	MITSUBISHI	MITSUBISHI	
INDOOR UNIT (DSAC) MODEL	PK36	MS09TW	
OUTDOOR UNIT (CU) MODEL	PU36EK	MU09TW	
TOTAL COOLING CAP.- MBH	34.2	8.5	
SENSIBLE COOLING CAP.- MBH	25.5	6.0	
HEATING CAP - KW/STEPS	-	-	
SYSTEM EER/SEER	10.2 SEER	10.2 SEER	
INDOOR UNIT (DSAC)	AC-4	AC-8/CU-8	
CONFIGURATION	WALL MTD.	WALL MTD.	
CFM AT HIGH SPEED	990	840	
MOCP	15	15	
MCA	2	0.5	
VOLTS/PH/HZ	115/1/60	115/1/60	
OUTDOOR UNIT (CU)	CU-4	CU-8	
MOCP	30	15	
MCA	22.0	11	
COMPRESSOR RLA	17.5	7.8	
VOLTS/PH/HZ	208/1/60	115/1/60	
NOTES	1,2,3,4,5,6,7	1,2,3,4,5,7	

THE FOLLOWING APPLY TO THIS SCHEDULE, AS APPLICABLE:
A. COOLING RATINGS BASED ON INDOOR CONDITIONS OF 80/67 deg. F (db/wb) AND OUTDOOR CONDITIONS OF 95 deg. F (db).
B. UNITS SHALL BE CERTIFIED PER ARI 210/240.

NOTES:
1. LOW AMBIENT OPERATION KIT FOR COOLING DOWN TO 0 deg. F (db)
2. WALL MOUNTED THERMOSTAT/CONTROLLER.
3. WASHABLE, CLEANABLE AIR FILTER.
4. REFRIGERANT PIPING KIT COMPLETE WITH COUPLINGS AND ALL APPURTENANCE ITEMS.
5. WALL MOUNTING KIT.
6. REPLACEMENT FOR EXISTING UNITS AC-4 AND CU-4.
7. UNITS MANUFACTURED AFTER JANUARY 23, 2006 SHALL HAVE A MIN. SEER OF 13.0.

PACKAGED AIR CONDITIONER SCHEDULE - AIR COOLED W/ GAS HEAT (LPG)

MARK	MANUFACTURER	MODEL	SUPPLY FAN SUPPLY CFM	O.A. CFM	ESP IN. WG	MOTOR HP	FAN RPM	DRIVE TYPE	COOLING TOTAL CAP. MBH	SENS. CAP. MBH	MAX.FACE VEL. -FPM	COIL ROWS	EAT DB/WB	GAS HEATING CAP. MBH OUTPUT	MIN. HTG. EFF. %	HTG. STAGES	EAT DB	GAS PRESS. IN. W.C.	CONDENSING NO. COMPR.	TOT. STEPS CAPACITY	COND. FANS NO./HP. EA.	EAT DB	UNIT DATA/ELECTRICAL MCA	MOCP	V/PH/HZ	SEER/EER AT ARI	NOTES
RTU-1	TRANE	YSC072	2,400	300	0.75	1	-	BELT	67.0	52.0	500	4	79.2/66.3	97.2	81%	1	60	12"(NOTE 6)	1	1	1/0.70	105	17.6	25	460/3/60	10.2 EER	1,2,3,4,5,6, 7
RTU-2	TRANE	YSC090	3,000	300	0.5	2	-	BELT	84.0	73.0	500	4	78.8/64.4	121.5	81%	2	60	12"(NOTE 6)	1	1	1/0.70	105	22.6	35	460/3/60	10.1 EER	1,2,3,4,5,6,7

THE FOLLOWING APPLY TO THIS SCHEDULE, AS APPLICABLE:
A. RTU= ROOF MOUNTED UNIT: PAC= GROUND MOUNTED UNIT.
NOTES:
1. UNIT SHALL BE VERTICAL SUPPLY DUCT AND RETURN AIR INLET ARRANGEMENT.
2. PROVIDE A PRE-FABRICATED ROOF CURB. CURB SHALL HAVE THRU THE BASE ELECTRICAL ACCESS. CURB HEIGHT SHALL BE SUFFICIENT TO RAISE THE BOTTOM OF THE RTU A MINIMUM OF 12" ABOVE THE FINISHED ROOF. SEE THE ARCHITECTURAL DRAWINGS FOR EXACT HEIGHT OF ROOF INSULATION AT ROOF TOP UNIT LOCATIONS.
3. SINGLE POINT ELECTRICAL CONNECTION FOR ENTIRE UNIT. PROVIDE A UNIT MOUNTED CIRCUIT BREAKER DISCONNECT SWITCH AND A 120V/15AMP, 2-PLUG, GFIC POWERED CONVENIENCE OUTLET.
4. PROVIDE 2" PLEATED FILTERS, ASHRAE DUST-SPOT EFICIENCY OF 40% AND A MERV LEVEL 8. FILTERS SHALL BE EQUAL TO FLANDERS PRECISIONAIRE 62R.
5. PROVIDE OUTSIDE AIR INTAKE HOOD WITH MOTORIZED 0-25% OUTSIDE AIR DAMPER.
6. HEAT SOURCE IS LP GAS. SEE DETAIL 8/M4.1.
7. PROVIDE HINGED ACCESS DOORS AND CONDENSER COIL HAIL GUARDS.

INFRARED HEATER (GAS) SCHEDULE

MARK	MANUFACTURER	MODEL	MTNG.HGHT. FT. AFF	DEFLECTOR ANGLE	TUBE LENGTH-FT.	CAP. MBH OUTPUT	MIN. HTG. EFF. %	HEATING STAGES	EAT DB	GAS PRESS. IN. WG	V/PH/HZ	NOTES
IFH-1A	SHWANK	STS-JZ-130	19'-0"	30 DEG.	40	108	83%	1	-	12"	120/1/60	1,2,3,4,5
IFH-1B	SHWANK	STS-JZ-130	19'-0"	30 DEG.	40	108	83%	1	-	12"	120/1/60	1,2,3,4,5
IFH-1C	SHWANK	STS-JZ-130	19'-0"	30 DEG.	40	108	83%	1	-	12"	120/1/60	1,2,3,4,5
IFH-1D	SHWANK	STS-JZ-130	19'-0"	30 DEG.	40	108	83%	1	-	12"	120/1/60	1,2,3,4,5

THE FOLLOWING APPLY TO THIS SCHEDULE, AS APPLICABLE:
A. PROVIDE ALL ACCESSORIES REQUIRED FOR PROPER INSTALLATION IN ACCORDANCE WITH THE MANUFACTURER'S IOM MANUALS.
NOTES:
1. PROVIDE MOUNTING KITS.
2. PROVIDE ROOF MOUNTED FRESH AIR INTAKE VENT CAP AND ROOF MOUNTED EXHAUST VENT CAP.
3. PROVIDE AN 18" LONG, 1/2" FLEXIBLE GAS CONNECTOR WITH COMBINATION GAS VALVE.
4. PROVIDE TRU-TEMP SET BACK THERMOSTAT AND LOW VOLTAGE KIT. THERMOSTAT SHALL BE PHOTO CELL ACTIVATED FOR OCCUPIED/UNOCCUPIED MODE WITH ADJUSTABLE OCCUPIED/UNOCCUPIED TEMPERATURE SETPOINTS.
5. HEAT SOURCE IS LP GAS. SEE DETAIL 3/M4.1.

LOUVER SCHEDULE

MARK	MANUFACTURER	MODEL/SERIES	LOUVER TYPE	WATER PENETR.	P.D. IN. H2O	SIZE	FREE AREA - FT. SQ.	NOTES
L-1	RUSKIN	ELC6375DAX	INTAKE	0.01	0.04	48Wx36H	5.3	1, 2

THE FOLLOWING APPLY TO THIS SCHEDULE, AS APPLICABLE:
A. WATER PENETRATION PER AMCA STANDARD 511, OZ. WATER PER SQ.FT. OF FREE AREA AT 1000 FPM VELOCITY.
B. PRESSURE DROP SCHEDULED IS THE MAXIMUM ALLOWABLE AT 500 FPM AIR VELOCITY THRU LOUVER FREE AREA.
C. COLOR AS SELECTED BY THE OWNER'S REPRESENTATIVE.
NOTES:
1. DRAINABLE, COMBINATION LOUVER/CONTROL DAMPER.
2. PROVIDE ALUMINUM BIRD SCREEN.

MOTOR OPERATED HOSE REEL ASSEMBLIES

THE MOTOR OPERATED HOSE REEL ASSEMBLIES SHALL CONSIST OF A MOTOR OPERATED HOSE REEL DESIGNED FOR HOSE EXTENSION AND RETRACTION, FLEXIBLE TUBING AND TAILPIPE ADAPTERS. HOSE REEL ASSEMBLIES SHALL BE AS MANUFACTURED BY NATIONAL SYSTEM OF GARAGE VENTILATION (NSGV), CAR-MON OR PRIOR APPROVED EQUAL.

A. MOTOR OPERATED HOSE REEL

1. THE HOSE REEL BODY AND HOUSING SHALL HAVE SIDE PLATE MOUNTING SUPPORTS CONSTRUCTED OF 11 GAUGE COLD ROLLED STEEL. THE SIDE PLATES ARE DRAWN SECURELY TOGETHER AND RETAINED BY HEAVY GAUGE "J" CHANNEL STEEL SUPPORT BRACES.
2. THE HOSE REEL HOUSING SHALL BE PROVIDED WITH A MOTOR DRIVE ASSEMBLY, A DIRECT DRIVE PLANETARY GEAR FUNCTION MOTOR-ASYNCHRONOUS, SINGLE PHASE 120V, 60HZ, 250W. THIS SHALL ENSURE LIFE TO THE HOSE BY PREVENTING STRESS AND STRAIN ON THE MECHANICAL (OR BONDED) HELIX AND FABRIC FROM CONSTANT PULLING AND STRETCHING ACTION DURING DAILY USE.
3. THE REEL DRUM IS CONSTRUCTED OF 16 GAUGE COLD ROLLED STEEL. THE END FLANGE OUTER EDGE IS ROLLED TO PROVIDE STRENGTH AND RIGIDITY. EACH END FLANGE SHALL HAVE A CENTER PRESSED 18" DIAMETER GROOVE. THE GROOVE ALLOWS THE DRUM REEL AND END FLANGE TO MATE SO THAT THE DRUM IS ALWAYS CENTERED IN RELATIONSHIP TO THE END FLANGE. THE DRUMS INNER SUPPORT BARS DRAW THE END FLANGE SECURELY TO THE DRUM. THE HOSE REEL DRUM WILL BE SUPPLIED WITH A HOSE-TRACKING BAR TO GUIDE THE HOSE DURING THE RECOILING FUNCTION SO NO HOSE OVERLAPPING SHALL OCCUR.
4. INTERNAL TO THE DRUM SHALL BE A CONTINUOUS PIECE OF 6 IN. DIAMETER AIRTITE ALUMINUM FLEXIBLE DUCT THAT IS CONNECTED TO THE HOSE ADAPTER AND RUNS TO THE 6 INCH SIDE DISCHARGE OUTLET DUCT CONNECTION. THIS IS TO ASSURE A CONSTANT VELOCITY OF AIR MOVEMENT THROUGH THE DRUM DURING CONVEYING THE CONTAMINANT FROM THE SOURCE TO THE SOLID DUCT MANIFOLD.
5. THE HOSE REEL WILL HAVE A HOSE-TO-DRUM CONNECTION FITTING ALLOWING FOR USE OF 6" DIAMETER HOSE. THE SIDE DISCHARGE FITTING IS A COMPLETE BEARING FITTING AND ALLOWS FOR THE CONNECTION OF 6" OR 8" DIAMETER DUCT.
6. THE HOSE REEL SHALL PROVIDE A WALL MOUNTED "UP/DOWN" SWITCH TO CONTROL THE STORAGE AND UNCOILING OF THE FLEXIBLE HOSE.
7. THE CLAMPING TAILPIPE ADAPTER SHALL BE NATIONAL SYSTEM OF GARAGE VENTILATION (NSGV), MODEL CTA .

B. FLEXIBLE TUBING

1. THE FLEXIBLE TUBING SHALL BE 6 INCH DIAMETER WITH A LENGTH OF 25 FEET AND SHALL BE CONSTRUCTED OF A SINGLE-PLY .12 MIL THICKNESS, HIGH TENSILE STRENGTH WEAVE GLASS FIBER CLOTH COATED ON BOTH SIDES WITH A HIGH TEMPERATURE SILICONE. THE MATERIAL SHALL BE LAPPED OVER A IRREPRESSIBLE CORE TO FORM A SINGLE PLY DOUBLE OVERLAPPED JOINT WHICH IS MECHANICALLY LOCKED WITHIN A CORROSION RESISTANT GALVANIZED HELIX. TO PREVENT THERMAL BREAKDOWN, NO ADHESIVES WILL BE USED OR PERMITTED IN THE CONSTRUCTION OF THE FLEXIBLE TUBING. THE TEMPERATURE RATING SHALL BE -65?F TO +600?F CONTINUOUS AND UP TO +850?F INTERMITTENT.
2. FLEXIBLE TUBING SHALL BE NATIONAL SYSTEM OF GARAGE VENTILATION (NSGV), MODEL NS.

C. CLAMPING TAILPIPE ADAPTER

1. THE CLAMPING TAILPIPE ADAPTER SHALL BE CONSTRUCTED OF MINIMUM 24 GAUGE STAINLESS STEEL. AS A SAFETY FEATURE, THE CLAMPING TAILPIPE ADAPTER MUST HAVE AN EXTERNAL SLEEVE CONSTRUCTED OF A MINIMUM 1/4" EPDM RUBBER SLEEVE AS WELL AS A HEMMED EDGE ON ANY EXPOSED EDGES. AS AN ADDITIONAL SAFETY FEATURE, A SCREEN CONSTRUCTED OF MINIMUM 16 GAUGE STEEL MESH SHALL BE INCORPORATED INTO THE ADAPTER TO PREVENT LARGER DEBRIS OR OTHER FOREIGN MATERIALS TO BE INTRODUCED INTO THE SYSTEM CAUSING POTENTIAL SYSTEM DAMAGE OR FAILURE. FOR POSITIVE ATTACHMENT TO THE TAILPIPE, A SPRING LOADED PONY CLAMP MUST BE A PERMANENT COMPONENT OF THE CLAMPING TAILPIPE ADAPTER.
2. THE CLAMPING TAILPIPE ADAPTER SHALL BE NATIONAL SYSTEM OF GARAGE VENTILATION (NSGV), MODEL CTA .

FAN SCHEDULE

MARK	MANUFACTURER	MODEL	TYPE	CFM	ESP IN. WG	FAN DRIVE	MAX. SONES	MOTOR HP	MOTOR TYPE	MOTOR V/PH/HZ	NOTES
EF-1	GREENHECK	BSQ-120	INLINE	675	0.375	BELT	9.0	1/4	ODP	120/1/60	2,4,5
EF-23	GREENHECK	GB-180	ROOF MTD.	3,500	0.25	BELT	15.0	3/4	TEFC	460/3/60	1,2
EF-24	GREENHECK	GB-180	ROOF MTD.	3,500	0.25	BELT	15.0	3/4	TEFC	460/3/60	1,2
EF-25	GREENHECK	SWB (ARR. 9)	CENTRIF.	2,400	3.0	BELT	20.0	2	TEFC	460/3/60	3
EF-26	GREENHECK	GB-081	ROOF MTD.	375	0.375	BELT	5.0	1/4	ODP	120/1/60	1,2

1. PROVIDE A PRE-FABRICATED ROOF CURB (MIN. 12" HIGH) WITH CURB SEAL.
2. PROVIDE A UNIT MOUNTED DISCONNECT SWITCH.
3. PROVIDE BELT GUARD, SHAFT GUARD, BACKDRAFT DAMPER AND FLANGED OUTLET.
4. PROVIDE A MOTOR/BELT GUARD AND A BACKDRAFT DAMPER.
5. REPLACEMENT FAN FOR EXISTING EF-1.

AIR DISTRIBUTION SCHEDULE

MARK	MANUFACTURER	MODEL/SERIES	TYPE	MOUNTING	MAX. NC	AIR PATTERN	NOTES
SD-A	METAL-AIRE	7600/7650	CLG. SUPPLY	T-BAR	30	NOTE 3	1
SD-B	METAL-AIRE	3000-1	SUPPLY	DUCT	30	CIRCULAR	-
RG-A	METAL-AIRE	7600R/7650R	CLG. RETURN	T-BAR	30	-	1, 4
RG-B	METAL-AIRE	CC15-1	RETURN	SURFACE	30	-	-
EG-A	METAL-AIRE	RH	EXHAUST	SURFACE	30	-	-
EG-B	METAL-AIRE	7650R	EXHAUST	T-BAR	30	-	2

THE FOLLOWING APPLY TO THIS SCHEDULE, AS APPLICABLE:
A. AIR DEVICES SHALL BE FURNISHED WITH OPPOSED BLADE DAMPERS (ADJUSTABLE FROM THE DEVICE FACE) WHEN INSTALLED WHERE ACCESS TO A DUCT MOUNTED DAMPER IS NOT POSSIBLE, UNO.
B. ROUND BRANCH DUCT RUNOUT SIZES SHALL BE THE SAME SIZE AS THE NECK OF THE ASSOCIATED AIR DEVICE, UNO.
C. PROVIDE SQUARE TO ROUND TRANSITIONS AS NECESSARY.
D. COLOR AS SELECTED BY THE OWNER'S REPRESENTATIVE.
NOTES:
1. 24x24 MODULE.
2. 12x12 MODULE.
3. 4-WAY DISCHARGE UNLESS INDICATED OTHERWISE ON THE PLANS.
4. NON-DUCTED RETURN GRILLES SHALL BE PROVIDED WITH ACOUSTICAL BOOTS. SEE M4.1 FOR DETAIL.

TTA

ADDITIONS TO MAINTENANCE FACILITY

5201 NELSON ROAD (MAINTENANCE BLDG)
5210 NELSON ROAD (VACANT LOT)
CARY, NORTH CAROLINA

COMPLETE FACILITIES SOLUTIONS

MOSER MAYER PHOENIX ASSOCIATES, PA

328 E. Market Street
Suite 200
Greensboro, N.C. 27401
Telephone 336-373-9800
Fax 336-373-0077

NORTH CAROLINA PROFESSIONAL SEAL 11244 ENGINEER STEVEN H. PHOENIX

MOSER MAYER PHOENIX ASSOCIATES, P.A. CERT. NO. C-784 NORTH CAROLINA GREENSBORO, N.C.

THIS DRAWING IS THE PROPERTY OF MOSER MAYER PHOENIX ASSOCIATES, P.A. AND IS NOT TO BE COPIED OR REPRODUCED IN PART OR WHOLE WITHOUT PERMISSION.

MULKEY ENGINEERS & CONSULTANTS
PO Box 33127
Raleigh, N.C. 27636
(919) 851-1912
(919) 851-1918 (FAX)
WWW.MULKEYINC.COM

RECORD DRAWING DISCLAIMER

TO THE BEST OF OUR KNOWLEDGE, THESE DRAWINGS HAVE BEEN REVISED TO REFLECT CHANGES MADE DURING THE CONSTRUCTION PROCESS, BASED UPON THE MARKED-UP DRAWINGS AND OTHER DATA FURNISHED TO THE ARCHITECT BY THE CONTRACTOR OR CONTRACTORS. THE ARCHITECT DOES NOT ASSURE THE ACCURACY OF THAT INFORMATION OR TAKE RESPONSIBILITY FOR ANY ERROR OR OMISSION INCORPORATED INTO THE DRAWINGS AS A RESULT. THE OWNER IS ADVISED TO OBTAIN INDEPENDENT VERIFICATION PRIOR TO USING THE INFORMATION CONTAINED HEREIN.

REVISIONS

NO.	DATE	DESCRIPTION
	01-26-08	RECORD DRAWINGS

DATE	APRIL 28, 2006
PROJECT NUMBER	05111.00 (05156.00)
SCALE	NONE
DRAWN BY	SENNATI

MECHANICAL SCHEDULES

M3.1

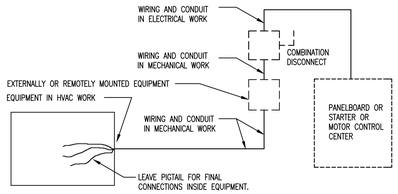

NOTES:

A. RESPONSIBILITY: UNLESS OTHERWISE INDICATED, ALL MOTORS AND CONTROLS SHALL BE FURNISHED, SET IN PLACE AND WIRED IN ACCORDANCE WITH THE TABLE AND DETAIL

B. REFER TO SECTION 15030-B AND ELECTRICAL DRAWINGS FOR REQUIREMENTS WHERE THE USE OF A MOTOR CONTROL CENTER IS FURNISHED UNDER DIVISION 16 WORK BY THE EC.

ITEM	FURNISHED UNDER	SET IN PLACE OR MOUNTED UNDER	WIRED AND CONNECTED UNDER
EQUIPMENT MOTORS, THERMAL OVERLOADS, RESISTANCE HEATERS	MC	MC	MC
MOTOR CONTROLLERS; MAGNETIC STARTERS, REDUCED VOLTAGE STARTERS AND OVERLOAD RELAYS	MC	MC	MC/EC
DISCONNECT SWITCHES, FUSED OR UNFUSED, HP RATED SWITCHES, THERMAL OVERLOAD SWITCHES AND FUSES, MANUAL OPERATING SWITCHES	EC	EC	MC/EC(1)
REDUCED VOLTAGE CONTROLS	MC	MC	MC
LINE VOLTAGE CONTROLS (2)	MC	MC	MC
DUCTMOUNTED FIRE & SMOKE DETECTORS (FOR HVAC EQUIPMENT)	MC/EC(5)	MC	MC(4)/EC(3)

1. IF FURNISHED AS PART OF FACTORY WIRED MECHANICAL EQUIPMENT, WIRING BY EC AND CONNECTIONS BY MC.

2. THOSE CONTROLS WHICH CARRY FULL LOAD METER CURRENTS OR OPERATE AT NOMINAL 120 V. TO GROUND OR LESS.

3. WIRING THROUGH PRIMARY CONTACTS OF THE DETECTOR TO ALARM SYSTEM BY EC. ALARM SYSTEM FURNISHED BY EC.

4. MC TO WIRE AUXILIARY CONTACTS OF DETECTOR THROUGH ASSOCIATED UNIT'S CONTROL CIRCUIT IN ORDER TO DE-ENERGIZE THE OPERATION OF THE FAN TO PREVENT THE SPREAD OF SMOKE/FIRE UPON ACTIVATION.

5. FURNISHED BY EC IF THE FIRE ALARM SYSTEM IS EXISTING OR IS TO BE PROVIDED BY THE EC. IF NO FIRE ALARM SYSTEM EXISTS OR IS TO BE PROVIDED, THEN THE MC IS TO FURNISH IN ACCORDANCE WITH THE REQUIREMENTS OF NFPA 90A, CURRENT EDITION.

1 M4.1 STANDARD ELECTRIC CONNECTIONS TO EQUIPMENT AND TABLE DETAIL
NO SCALE

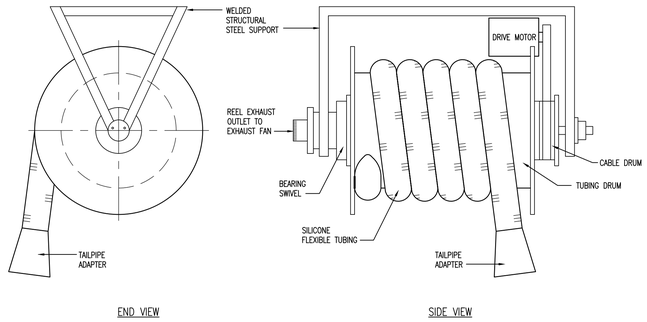

2 M4.1 ENGINE EXHAUST TUBING/REEL DETAIL
NO SCALE

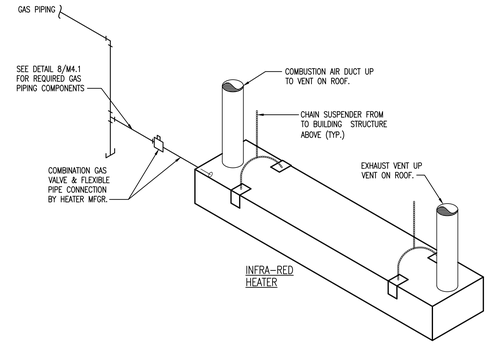

3 M4.1 INFRARED GAS FIRED HEATER DETAIL
NO SCALE

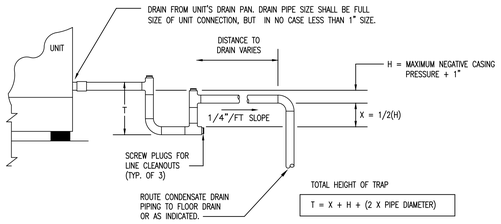

NOTES:

1. DETAIL IS SHOWN FOR SINGLE DRAIN CONNECTION. ON UNITS WITH TWO DRAIN CONNECTIONS, TRAP EACH INDIVIDUAL DRAIN AND RUN SEPARATELY TO THE DRAIN. DO NOT CONNECT ALL DRAINS TO A COMMON DRAIN LINE WITH ONLY ONE TRAP.

2. DETAIL AS SHOWN IS FOR CONDENSATE DRAIN IN THE NEGATIVE STATIC PORTION OF THE CABINET.

3. THE UNIT AND DRAIN PAN MUST BE LEVEL TO WITHIN 0.25 INCH SIDE TO SIDE.

4. CONDENSATE DRAIN LINES SHALL HAVE PROVISIONS FOR REGULAR CLEANING TO PREVENT SEDIMENT FROM PLUGGING THE DRAIN AND CAUSING THE DRAIN PAN TO OVERFLOW.

5. ALL CONDENSATE DRAIN LINES FROM DRAIN PANS SHALL BE COPPER AS SPECIFIED AND INSULATED WITH 1/2" THICK CLOSED CELL TUBULAR INSULATION.

6. DETAIL IS TYPICAL FOR ALL APPLICATIONS WHERE CONDENSATE LINES MUST BE TRAPPED.

4 M4.1 CONDENSATE TRAP INSTALLATION DETAIL
NO SCALE

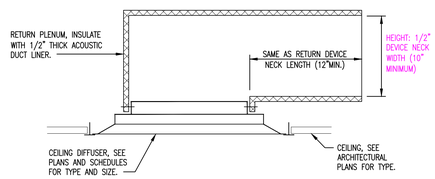

5 M4.1 ACOUSTICAL BOOT RETURN DETAIL
NO SCALE

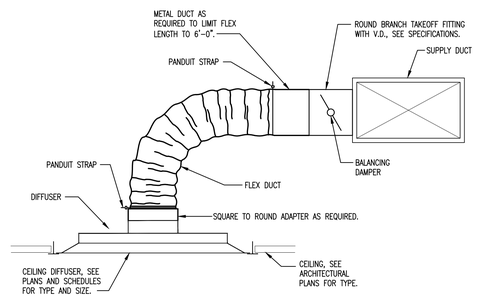

6 M4.1 CEILING DIFFUSER INSTALLATION DETAIL
NO SCALE

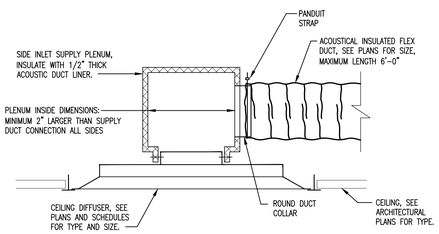

7 M4.1 CEILING DIFFUSER SUPPLY PLENUM DETAIL
NO SCALE

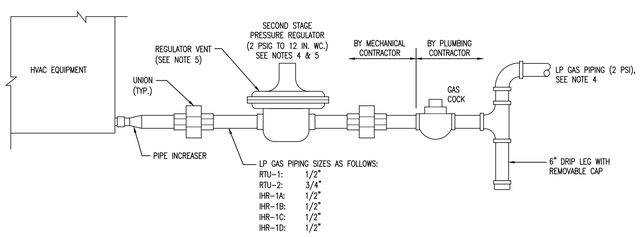

NOTES:
1. THIS DETAIL SHOWS MINIMUM REQUIRED GAS PIPING COMPONENTS. COORDINATE EXACT PIPING ARRANGEMENT AND COMPONENTS WITH THE EQUIPMENT MANUFACTURERS INSTALLATION AND MAINTENANCE MANUALS.
2. SEE EQUIPMENT SCHEDULES ON SHT. M3.1 FOR LP GAS REQUIRMENTS OF HVAC EQUIPMENT.
3. REFER TO PLUMBING SPECIFICATION 15494-A LP GAS SYSTEMS FOR GAS PIPING AND COMPONENTS.
4. FIELD VERIFY UPSTREAM GAS PRESSURE.
5. PROVIDE REGULATORS WITH VENT LIMITING DEVICES IN ACCORDANCE WITH NORTH CAROLINA FUEL GAS CODE.

8 M4.1 HVAC EQUIPMENT - LP GAS PIPING DETAIL
NO SCALE

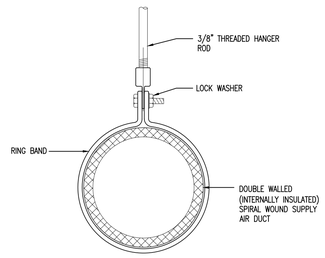

GALVANIZED STEEL DUCT

AIR DUCT SIZE	RING BAND SIZE	RING BAND BOLT SIZE	MAXIMUM SPACING
UP TO 18" DIA.	1" x 1/8"	2" x 3/8"	8'-0"
19" – 36" DIA.	1-1/2 x 1/8"	2" x 3/8"	8'-0"

9 M4.1 EXPOSED ROUND SUPPLY DUCT SUPPORT DETAIL
NO SCALE

TTA

ADDITIONS TO MAINTENANCE FACILITY

5201 NELSON ROAD (MAINTENANCE BLDG)
5210 NELSON ROAD (VACANT LOT)
CARY, NORTH CAROLINA

COMPLETE FACILITIES SOLUTIONS

MOSER MAYER PHOENIX ASSOCIATES, PA

328 E. Market Street
Suite 200
Greensboro, N.C. 27401
Telephone 336-373-9800
Fax 336-373-0077

NORTH CAROLINA PROFESSIONAL SEAL 11244 ENGINEER THOMAS H. PHOENIX

MOSER MAYER PHOENIX ASSOCIATES P.A. CERT. NO. C-784 NORTH CAROLINA GREENSBORO, N.C.

THIS DRAWING IS THE PROPERTY OF MOSER MAYER PHOENIX ASSOCIATES, P.A. AND IS NOT TO BE COPIED OR REPRODUCED IN PART OR WHOLE WITHOUT PERMISSION.

MULKEY ENGINEERS & CONSULTANTS
PO Box 33127
Raleigh, NC 27636
(919) 851-1912
(919) 851-1918 (FAX)
WWW.MULKEYINC.COM

RECORD DRAWING DISCLAIMER

TO THE BEST OF OUR KNOWLEDGE, THESE DRAWINGS HAVE BEEN REVISED TO REFLECT CHANGES MADE DURING THE CONSTRUCTION PROCESS, BASED UPON THE MARKED-UP DRAWINGS AND OTHER DATA FURNISHED TO THE ARCHITECT BY THE CONTRACTOR OR CONTRACTORS. THE ARCHITECT DOES NOT ASSURE THE ACCURACY OF THAT INFORMATION OR TAKE RESPONSIBILITY FOR ANY ERROR OR OMISSION INCORPORATED INTO THE DRAWINGS AS A RESULT. THE OWNER IS ADVISED TO OBTAIN INDEPENDENT VERIFICATION PRIOR TO USING THE INFORMATION CONTAINED HEREIN.

REVISIONS

NO.	DATE	DESCRIPTION
	01-26-08	RECORD DRAWINGS

DATE	APRIL 28, 2006
PROJECT NUMBER	05111.00 (05156.00)
SCALE	AS NOTED
DRAWN BY	SENNATI

MECHANICAL DETAILS

M4.1

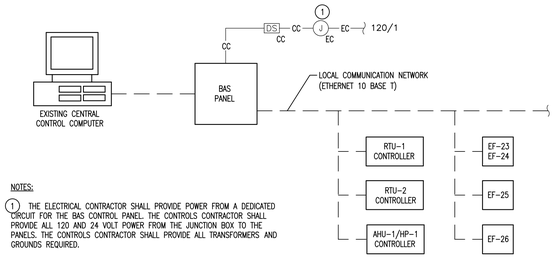

NOTES:

1. THE ELECTRICAL CONTRACTOR SHALL PROVIDE POWER FROM A DEDICATED CIRCUIT FOR THE BAS CONTROL PANEL. THE CONTROLS CONTRACTOR SHALL PROVIDE ALL 120 AND 24 VOLT POWER FROM THE JUNCTION BOX TO THE PANELS. THE CONTROLS CONTRACTOR SHALL PROVIDE ALL TRANSFORMERS AND GROUNDS REQUIRED.

1 / M5.1 BUILDING AUTOMATION SYSTEM (BAS) CONTROL DIAGRAM
NO SCALE

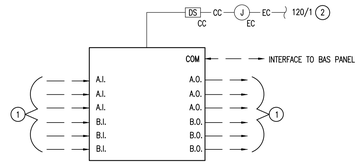

NOTES:

1. REFER TO INDIVIDUAL CONTROL AND FLOW DIAGRAMS AND SEQUENCE OF OPERATIONS FOR REQUIRED INPUT AND OUTPUTS.
2. THE ELECTRICAL CONTRACTOR SHALL PROVIDE POWER FROM DEDICATED CIRCUIT(S) FOR THE CONTROLLER(S). THE CONTROLS CONTRACTOR SHALL PROVIDE ALL 120 AND 24 VOLT POWER FROM THE LOCAL AREA JUNCTION BOX(ES) TO THE PANEL(S). THE CONTROLS CONTRACTOR SHALL PROVIDE ALL TRANSFORMERS AND GROUNDS REQUIRED.

2 / M5.1 TYPICAL CONTROLLER DIAGRAM
NO SCALE

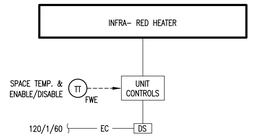

3 / M5.1 INFRA-RED HEATER CONTROL DIAGRAM
NO SCALE

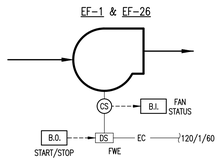

NOTE:
EF-1 IS A REPLACEMENT FOR AN EXISTING FAN. CONTRACTOR TO CONNECT NEW EF-1 TO EXISTING CONTROLS.

4 / M5.1 EXHAUST FAN CONTROL DIAGRAM
NO SCALE

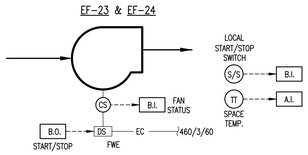

5 / M5.1 EXHAUST FAN CONTROL DIAGRAM
NO SCALE

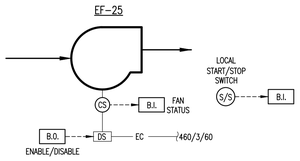

6 / M5.1 EXHAUST FAN CONTROL DIAGRAM
NO SCALE

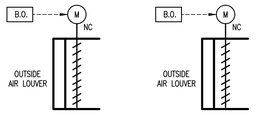

NOTE:
TWO NEW O.A. LOUVERS IN EXISTING PARTS ROOM 117E. RECONNECT TO EXISTING CONTROL CIRCUITS. FIELD VERIFY AND CORRDINATE CONTROL REQUIREMENTS WITH NEW DAMPER OPERATORS.

7 / M5.1 O.A. LOUVER CONTROL DIAGRAM
NO SCALE

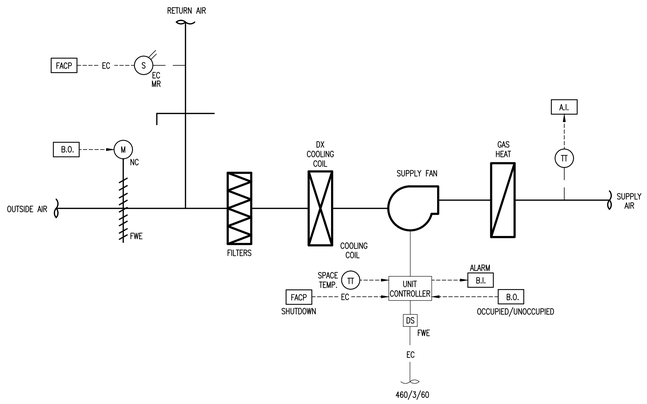

8 / M5.1 ROOF TOP UNIT FLOW AND CONTROL DIAGRAM
NO SCALE

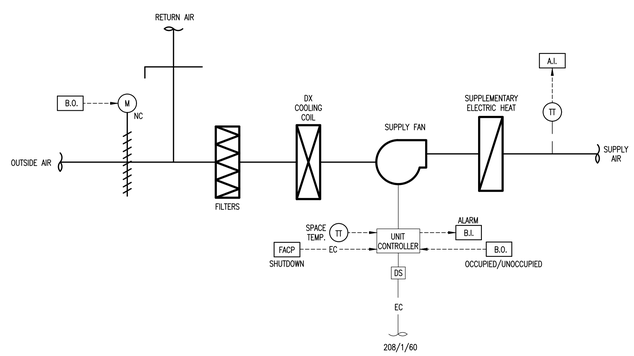

9 / M5.1 SPLIT SYSTEM HEAT PUMP UNIT FLOW AND CONTROL DIAGRAM
NO SCALE

SEQUENCE OF OPERATION

THE EXISTING SIEMENS BUILDING AUTOMATION SYSTEM (BAS) SHALL BE EXTENDED AND MODIFIED TO PROVIDE CONTROL POINTS INDICATED ON THE CONTROL DIAGRAMS, PROVIDE MONITORING/DIAGNOSTICS OF THE NEW HVAC EQUIPMENT AND PERFORM CONTROL STRATEGIES INDICATED IN THIS SEQUENCE OF OPERATIONS. ALL NEW CONTROL DEVICES SHALL, AS A MINIMUM, BE THE SAME QUALITY AS THE EXISTING CONTROL DEVICES.

PACKAGED ROOF TOP UNITS AND SPLIT SYSTEM HEAT PUMPS (RTU-1, RTU-2 AND AHU-1/HP-1):

PACKAGED ROOF TOP UNITS AND SPLIT SYSTEM HEAT PUMP SHALL BE CONTROLLED BY FIELD INSTALLED APPLICATION SPECIFIC CONTROLLERS (ASC) AND WALL MOUNTED TEMPERATURE SENSORS. UNIT CONTROLLERS SHALL COMMUNICATE WITH THE BAS FOR OCCUPIED/UNOCCUPIED COMMANDS AND FOR ALARM MONITORING. THE BAS SHALL LIMIT THE RANGE THAT OCCUPANTS CAN ADJUSTMENT THE SPACE TEMPERATURE SETPOINTS. THE BAS SHALL ALSO MONITOR THE SUPPLY AIR DISCHARGE AIR TEMPERATURE OF EACH UNIT. EACH WALL MOUNTED TEMPERATURE SENSOR SHALL BE PROVIDED WITH AN OVERIDE BUTTON WHICH WILL ALLOW ROOM OCCUPANTS TO INDEX THE SYSTEM TO OCCUPIED MODE FOR A PRE-PROGRAMMED (ADJUSTABLE) LENGTH OF TIME.

WHEN INDEXED BY THE BAS TO THE OCCUPIED MODE, THE ASSOCIATED THE SUPPLY FAN SHALL RUN CONTINUOUSLY AND OUTSIDE AIR DAMPER SHALL OPEN. THE UNIT CONTROLLERS SHALL CYCLE THE COOLING OR HEATING SOURCE TO MAINTAIN ROOM TEMPERATURE SETPOINT (ADJUSTABLE).

WHEN INDEXED BY THE BAS TO THE UNOCCUPIED MODE, THE ASSOCIATED OUTSIDE AIR DAMPERS SHALL BE CLOSED AND THE SUPPLY FAN SHALL BE OFF. THE UNIT CONTROLLERS SHALL CYCLE SUPPLY FAN AND THE COOLING OR HEATING SOURCE TO MAINTAIN SETBACK ROOM TEMPERATURE SETPOINTS (ADJUSTABLE).

RTU-1 AND RTU-2 SHALL BE SHUT DOWN UPON AN ALARM FROM THEIR RETURN AIR MOUNTED SMOKE DETECTOR. RTU-1, RTU-2 AND AHU-1/HP-1 SHALL BE SHUT DOWN FROM AN ALARM FROM THE BUILDING FACP.

DUCTLESS SPLIT SYSTEM UNITS (AC-4/CU-4 AND AC-8/CU-8):

DUCTLESS SPLIT SYSTEM UNITS SHALL BE CONTROLLED BY THEIR OWN PROGRAMMABLE CONTROLLERS/WALL MOUNTED TEMPERATURE SENSORS. UNIT CONTROLLER SHALL CYCLE THE SUPPLY FAN AND THE COOLING OR HEATING SOURCE TO MAINTAIN ROOM TEMPERATURE SETPOINT (ADJUSTABLE).

INFRA-RED HEATERS (IFH-1A, 1B, 1C AND 1D):

INFRA-RED HEATER UNITS SHALL BE CONTROLLED BY THEIR OWN PROGRAMMABLE CONTROLLERS/WALL MOUNTED TEMPERATURE SENSORS. UNIT CONTROLLER SHALL CYCLE THE HEATING SOURCE TO MAINTAIN ROOM TEMPERATURE SETPOINT (ADJUSTABLE). REFER TO SPECIFICATIONS, CONTROL DIAGRAMS AND EQUIPMENT SCHEDULES FOR REQUIREMENTS.

TOILET EXHAUST FANS (EF-1 AND EF-26):

TOILET EXHAUST FANS SHALL BE CONTROLLED BY THE BAS TO RUN ANYTIME THE BUILDING IS INDEXED TO THE OCCUPIED MODE.

MAINTENANCE BAY VENTILATION FANS (EF-23 AND EF-24):

MAINTENANCE BAY VENTILATION/EXHAUST FANS SHALL BE STARTED/STOPPED BY THE BAS BASED ON THE PROGRAMMED OCCUPIED/UNOCCUPIED SCHEDULE, SPACE TEMPERATURE AND THE LOCAL START/STOP SWITCH.

WHEN IN THE BUILDING IS INDEXED TO THE OCCUPIED MODE, THE FANS SHALL RUN ANTIME THE SPACE TEMPERATURE SETPOINT IS ABOVE 80 DEGREES F (ADJUSTABLE). ADDITIONALLY THE FANS SHALL RUN IF THE LOCAL START/STOP SWITCH IS IN THE "ON" POSITION.

WHEN IN THE BUILDING IS INDEXED TO THE UNOCCUPIED MODE, THE FANS SHALL BE "OFF" REGARDLESS OF THE LOCAL SWITCH POSITION OR SPACE TEMPERATURE.

MAINTENANCE BAY VEHICLE EXHAUST FAN (EF-25):

THE VEHICLE EXHAUST FAN SHALL BE STARTED/STOPPED BY THE BAS BASED ON THE PROGRAMMED OCCUPIED/UNOCCUPIED SCHEDULE

WHEN IN THE BUILDING IS INDEXED TO THE OCCUPIED MODE, THE FAN SHALL BE CONTROLLED BY THE LOCAL START/STOP SWITCH.

WHEN IN THE BUILDING IS INDEXED TO THE UNOCCUPIED MODE, THE FAN SHALL BE "OFF" REGARDLESS OF THE LOCAL SWITCH POSITION.

FLOW/CONTROL SCHEMATIC LEGENDS

REFER TO SHEET M0.1 FOR ADDITIONAL LEGENDS AND ABBREVIATIONS

GENERAL NOTES: TYPICAL ALL M5 SERIES SHEETS:

1. REFER TO CONTROL SEQUENCE IN SECTION 15940B FOR SEQUENCES OF OPERATION.
2. ALL MANUAL RESET DEVICES SHALL BE LOCATED AT FLOOR LEVEL SO AS NOT TO REQUIRE THE USE LADDERS TO INSPECT THE DEVICE AND INITIATE RESET FUNCTION.
3. CONTROL COMPONENTS SHOWN DO NOT REPRESENT ACTUAL EQUIPMENT, BUT RATHER CONTROL FUNCTION.
4. THE CONTROLS CONTRACTOR SHALL PROVIDE MATERIALS, EQUIPMENT AND INSTALLATIONS TO COMPLY WITH SPECIFIC REQUIREMENTS AS DEFINED IN DIVISION 15B CONTRACT DOCUMENTS.
5. THE MECHANICAL CONTRACTOR SHALL TERMINATE POWER CONNECTIONS TO DRIVES AND MOTORS. FINAL TERMINATION TO MOTORS SHALL BE VIA FLEX CONDUIT.
6. SMOKE DETECTORS SHALL BE FURNISHED AND INSTALLED BY THE MECHANICAL CONTRACTOR AS INDICATED. SMOKE DETECTORS SHALL HAVE DUAL CONTACTS. ONE CONTACT SHALL BE FOR FUTURE USE. ONE CONTACT SHALL BE WIRED TO THE AHU SUPPLY FAN STARTER CIRCUIT BY THE MECHANCIAL CONTRACTOR.
7. FAN STATUS MAY BE OBTAINED DIRECT FROM CURRENT SWITCH AS SHOWN OR VIA A DIFFERENTIAL PRESSURE SWITCH AROUND THE SUPPLY AIR FAN.

ABREVIATIONS

CC	CONTROLS CONTRACTOR	PBO	PROVIDED BY OWNER
CS	CURRENT SWITCH	PI	PRESSURE INDICATOR (GAUGE)
DPS	DIFFERENTIAL PRESSURE SWITCH	PS	PRESSURE SWITCH/SENSOR
DW	DIRECT WIRED	PT	PRESSURE TRANSMITTER
EC	ELECTRICAL CONTRACTOR	PTP	PRESSURE/TEMPERATURE PORT
FBO	FURNISHED BY OWNER	SM	SUPPLIER/MANUFACTURER
FE	FLOW ELEMENT	TE	TEMPERATURE ELEMENT
FS	FLOW SWITCH	TI	TEMPERATURE INDICATOR (GAUGE)
FT	FLOW TRANSMITTER	TS	TEMPERATURE SWITCH/SENSOR
FWE	FURNISHED WITH EQUIPMENT	TT	TEMPERATURE TRANSMITTER
HT	HUMIDITY TRANSMITTER		
MC	MECHANICAL CONTRACTOR		

CONTROL RESPONSIBILITY

CONTROL WIRING	POWER WIRING	
	CC	BY CONTROLS CONTRACTOR
EC	EC	BY ELECTRICAL CONTRACTOR
MC	MC	BY MECHANICAL CONTRACTOR
PC	PC	BY PLUMBING CONTRACTOR
PBO	PBO	PROVIDED BY OWNER
SM	SM	BY SUPPLIER/MANUFACTURER

ELECTRONIC SIGNAL TYYPES

- ELECTRONIC SIGNAL (MILLIAMP, MILLIVOLT, ETC)
- A.I. — ANALOG INPUT
- A.O. — ANALOG OUTPUT
- B.I. — BINARY INPUT
- B.O. — BINARY OUTPUT

TYPICAL SYMBOLS

- AIR FILTER
- AIR FLOW MEASURING STATION
- AS-1 — AIR SEPARATOR
- M — ACTUATOR, MOTOR (DAMPER OR VALVE)
- S — ACTUATOR, SOLENOID (VALVE)
- AAV — AIR VENT, AUTOMATIC
- MAV — AIR VENT, MANUAL
- BDD — DAMPER, BACKDRAFT
- DAMPER, OPPOSED BLADE
- DAMPER, PARALLEL BLADE
- FAN, CENTRIFUGAL
- FAN, PROPELLER
- PRESSURE REDUCING (NUMBER AND SPECIFY)
- PUMP
- SD — PUMP SUCTION DIFFUSER
- RV OR SV — RELIEF VALVE (RV) OR SAFETY VALVE (SV)
- TDV, NS — TRIPLE DUTY VALVE (INCLUDES: NON-SLAM CHECK VALVE, SHUTOFF & CALIBRATED BALANCING VALVE)
- AFCV — VALVE – AUTOMATIC FLOW CONTROL
- VALVE – CALIBRATED BALANCING
- VALVE – TWO-WAY CONTROL
- VALVE – THREE-WAY CONTROL

PRESSURE & TEMPERATURE INSTRUMENTATION

PI-XX PRESSURE GAUGE

SUFFIX	RANGE
-A	0-30 PSIG
-B	0-60 PSIG
-C	0-100 PSIG
-D	0-160 PSIG
-E	0-200 PSIG
-F	30"-0-30 PSIG (COMPOUND)
-G	30"-0-60 PSIG (COMPOUND)

-xP PULSATION DAMPER (SNUBBER)
-xS STEAM SIPHON PIGTAIL

TI-XX TEMPERATURE GAUGE

SUFFIX	RANGE
-A	(-40)-110 °F
-B	0-100 °F
-C	0-160 °F
-D	30-180 °F
-E	30-240 °F

TTA

ADDITIONS TO MAINTENANCE FACILITY

5201 NELSON ROAD (MAINTENANCE BLDG)
5210 NELSON ROAD (VACANT LOT)
CARY, NORTH CAROLINA

COMPLETE FACILITIES SOLUTIONS
MOSER MAYER PHOENIX ASSOCIATES, PA
328 E. Market Street
Suite 200
Greensboro, N.C. 27401
Telephone 336-373-9800
Fax 336-373-0077

NORTH CAROLINA PROFESSIONAL SEAL 11244 ENGINEER THOMAS H. PHOENIX

MOSER MAYER PHOENIX ASSOCIATES, P.A. CERT. NO. C-784 NORTH CAROLINA GREENSBORO, N.C.

THIS DRAWING IS THE PROPERTY OF MOSER MAYER PHOENIX ASSOCIATES, P.A. AND IS NOT TO BE COPIED OR REPRODUCED IN PART OR WHOLE WITHOUT PERMISSION.

MULKEY ENGINEERS & CONSULTANTS
PO Box 33127
Raleigh, N.C. 27636
(919) 851-1912
(919) 851-1918 (FAX)
WWW.MULKEYINC.COM

RECORD DRAWING DISCLAIMER

TO THE BEST OF OUR KNOWLEDGE, THESE DRAWINGS HAVE BEEN REVISED TO REFLECT CHANGES MADE DURING THE CONSTRUCTION PROCESS, BASED UPON THE MARKED-UP DRAWINGS AND OTHER DATA FURNISHED TO THE ARCHITECT BY THE CONTRACTOR OR CONTRACTORS. THE ARCHITECT DOES NOT ASSURE THE ACCURACY OF THAT INFORMATION OR TAKE RESPONSIBILITY FOR ANY ERROR OR OMISSION INCORPORATED INTO THE DRAWINGS AS A RESULT. THE OWNER IS ADVISED TO OBTAIN INDEPENDENT VERIFICATION PRIOR TO USING THE INFORMATION CONTAINED HEREIN.

REVISIONS

NO.	DATE	DESCRIPTION
	01-26-08	RECORD DRAWINGS

DATE	APRIL 28, 2006
PROJECT NUMBER	05111.00 (05156.00)
SCALE	AS NOTED
DRAWN BY	SENNATI

CONTROL SCHEMATICS

M5.1

INTERIOR LUMINAIRE SCHEDULE

MARK	MANUFACTURER	CATALOG NUMBER	LAMP(S) #	LAMP(S) TYPE	LAMP(S) WATT.	BALLAST(S) #	BALLAST(S) TYPE	BALLAST(S) WATT.	FIXTURE WATT.	FIXTURE VOLTAGE	MOUNTING	REMARKS
	LITHONIA	2SP8 SERIES		–								(2) 2'x4' LAY-IN TROFFERS W/ 1/8" THICK A12 ACRYLIC LENS AND
AM	DAY-BRITE	2SP SERIES		32 WATT T8								LABOR SAVING TANDEM CONNECTION; "AM"=MASTER, "AS"=SATELLITE;
	LSI MIDWEST	PRESTIGE SERIES	6	FLUORESCENT	32	1	2-LAMP ELECTRONIC	58	173	120/277	CEILING RECESSED	(1) 4-LAMP & (1) 2 LAMP ELECT. BALLAST; INBOARD-OUTBOARD WIRING;
AS	METALUX	2GC8 SERIES		4100° K		1	4-LAMP ELECTRONIC	115				(6) 32 WATT T8/35K FLUORESCENT LAMPS
	COLUMBIA	ST8 SERIES		–								–
	LITHONIA	2SP8 SERIES		–								2'x4' LAY-IN TROFFER W/ 1/8" THICK A12 ACRYLIC LENS;
A2	DAY-BRITE	2SP SERIES	2	32 WATT T8		1	2-LAMP ELECTRONIC	58	58			120/277V ELECTRONIC BALLAST;
	LSI MIDWEST	PRESTIGE SERIES		FLUORESCENT	32					120/277	CEILING RECESSED	32 WATT T8/41K FLUORESCENT LAMPS
A4	METALUX	2GC8 SERIES	4	4100° K		1	4-LAMP ELECTRONIC	115	115			A2 = 2-LAMP
	COLUMBIA	ST8 SERIES		–								A4 = 4-LAMP
	LITHONIA	–		–								OVAL SHAPED DIRECT/INDIRECT LINEAR PENDANT; PARABOLIC LOUVER;
	PRUDENTIAL	LEGEND SERIES		32 WATT T8							PENDANT MOUNTED	(3) 32 WATT T8 FLUORESCENT LAMPS; INBOARD/OUTBOARD WIRING FOR
B	LSI MIDWEST	–	3	FLUORESCENT	32	1	2-LAMP ELECTRONIC	58	88	120/277	9'-0" AFF TO BOTTOM	TRI-LEVEL LIGHTING; TOP REFLECTOR FOR 80% UP, 20% DOWN LIGHT
	METALUX	–		4100° K		1	1-LAMP ELECTRONIC	30				DISTRIBUTION; 120/277V ELECTRONIC BALLASTS; ADJUSTABLE +/- 24"
	COLUMBIA	–		–								AIRCRAFT CABLE MOUNTING; GALVANIZED FINISH
	LITHONIA	–		–								OVAL SHAPED DIRECT/INDIRECT LINEAR PENDANT; PARABOLIC LOUVER;
C	PRUDENTIAL	LEGEND SERIES	2	32 WATT T8		1	2-LAMP ELECTRONIC	58	58		PENDANT MOUNTED	(2) 32 WATT T8 LAMPS PER 48"; TOP REFLECTOR FOR 80% UP,
	LSI MIDWEST	–		FLUORESCENT	32					120/277	9'-0" AFF TO BOTTOM	20% DOWN LIGHT DISTRIBUTION; 120/277V ELECTRONIC BALLAST;
C2	METALUX	–	4	4100° K		1	4-LAMP ELECTRONIC	115	115			ADJUSTABLE +/- 24" AIRCRAFT CABLE MOUNTING; GALVANIZED FINISH
	COLUMBIA	–		–								C=48" W/ (2) LAMPS; C2=96" W/ (4) LAMPS
	GOTHAM	AF SERIES	–	–								8" APERTURE OPEN REFLECTOR DOWNLIGHT; SEMI-DIFFUSE
	PORTFOLIO	C9242 SERIES	–	TRIPLE TUBE								LOW IRIDESCENT FINISH; (2) 26 WATT TRIPLE TUBE COMPACT
D	OMEGA	OM82H26PLT SERIES	2	COMPACT FLUORESCENT	26	1	2-LAMP ELECTRONIC	55	55	120/277	CEILING RECESSED	FLUORESCENT HORIZONTALY MOUNTED LAMPS;
	PRESCOLITE	CFTD8 SERIES	–	4100° K								120/277V; ELECTRONIC BALLAST
	INDY	EQUAL	–	–								G=OPEN; G1=PROVIDED W/ TEMPERED PRISMATIC LENS

GENERAL LUMINAIRE SCHEDULE NOTES

1. THE CONTRACTOR SHALL BE RESPONSIBLE FOR COORDINATING EACH FIXTURE LOCATION WITH THE ARCHITECTURAL REFLECTED CEILING PLANS AND FOR VERIFYING AND PROVIDING THE MOUNTING SYSTEM REQUIRED FOR EACH FIXTURE. THE CONTRACTOR SHALL ALSO PROVIDE PLASTER FRAMES., WALL BRACKETS, SUPPORTS, OR OTHER APPURTENANCES AS REQUIRED FOR PROPER INSTALLATION. THE CATALOG NUMBER SHALL BE MODIFIED SLIGHTLY TO ACCOMODATE VARIOUS MOUNTING CONFIGURATIONS AS REQUIRED.
2. VERIFY FIXTURE, LAMP, AND VOLTAGE COMPATIBILITY.
3. WHEN HANDLING A FIXTURE'S EXPOSED REFLECTIVE SUFACES, CLEAN WHITE COTTON GLOVES SHALL BE WORN. CONTRACTOR SHALL CLEAN ALL MARKS INCLUDING BUT NOT LIMITED TO DUST, FINGERPRINTS, PAINT, ETC. FROM ALL SURFACES OF THE LUMINAIRE. THE REFLECTIVE SURFACES SHALL BE CLEANED WITH A CLEAN, DRY CHEESECLOTH AFTER ALL INTERIOR WORK HAS BEEN COMPLETED. PLASTIC SHIPPING BAGS SHALL REMAIN ON THE LUMINAIRES UNTIL WORK IS COMPLETED.
4. ALL LUMINARES SHALL BE POST PAINTED AT THE FACTORY UNLESS OTHERWISE NOTED.
5. ALL COMPACT FLUORESCENT LUMINARES WITH T5 LAMPS AND SMALLER TO HAVE END-OF-LIFE CIRCUIT CUTOUT FEATURE.
6. PROVIDE EMERGENCY BALLASTS IN LUMINAIRES INDICATED AS EMERGENCY. PROVIDE BODINE B50 OR EQUIVALENT FOR T8 FLUORESCENT LAMPS AND BODINE B94C OR EQUIVALENT FOR COMPACT 4-PIN FLUORESCENT LAMPS.
7. VERIFY LUMINAIRE COLORS WHERE CUSTOM PAINT COLORS ARE SPECIFIED PRIOR TO ORDERING.
8. ALL FLUORESCENT LAMPS TO HAVE A CRI (COLOR RENDERING INDEX) OF 80 OR HIGHER.

DEMOLITION PLAN NOTES:

1. EXISTING LIGHT (LOCATED IN AREA WHERE CEILING IS REPLACED) TO BE REMOVED, STORED, CLEANED, RE-LAMPED, AND RE-INSTALLED. REFER TO NEW LIGHTING PLAN 1/EL1.1 FOR NEW LOCATION(S).
2. EXISTING LIGHT TO BE REPLACED AS NOTED ON NEW LIGHTING PLAN 1/EL1.1.
3. ELECTRICAL DEVICES NOTED WITH 'EX' ARE EXISTING TO REMAIN.
4. ELECTRICAL DEVICES NOTED WITH 'REL' ARE TO BE RELOCATED PER NEW POWER PLAN 1/EP1.1. EXTEND/RE-ROUTE EXISTING CIRCUITRY, CABLING, ETC. TO NEW LOCATION.
5. ALL CEILING MOUNTED ELECTRICAL DEVICES (FIRE ALARM, POWER, CAMERA, TELE/DATA, ETC) LOCATED IN AREAS WHERE CEILINGS ARE REPLACED TO BE TAKEN DOWN (OR SECURED TO ROOF STRUCTURE) AND RE-INSTALLED IN NEW CEILING.
6. EXISTING SNAP SWITCHES TO BE REPLACED WITH 3-WAY SWITCHES AS SHOWN ON LIGHTING PLAN 1/EL1.1.
7. EXISTING WALL MOUNTED LIGHT TO BE RELOCATED AS SHOWN ON LIGHTING PLAN 1/EL1.1. EXTEND EXISTING CIRCUITRY TO NEW LOCATION.
8. EXISTING CEILING THIS AREA TO BE TAKEN DOWN FOR RENOVATION AND THEN RE-INSTALLED. ALL CEILING MOUNTED ELECTRICAL DEVICES TO BE TAKEN DOWN (OR PROTECTED TO STRUCTURE ABOVE) AND RE-INSTALLED (LIGHTS TO BE CLEANED AND RE-LAMPED).

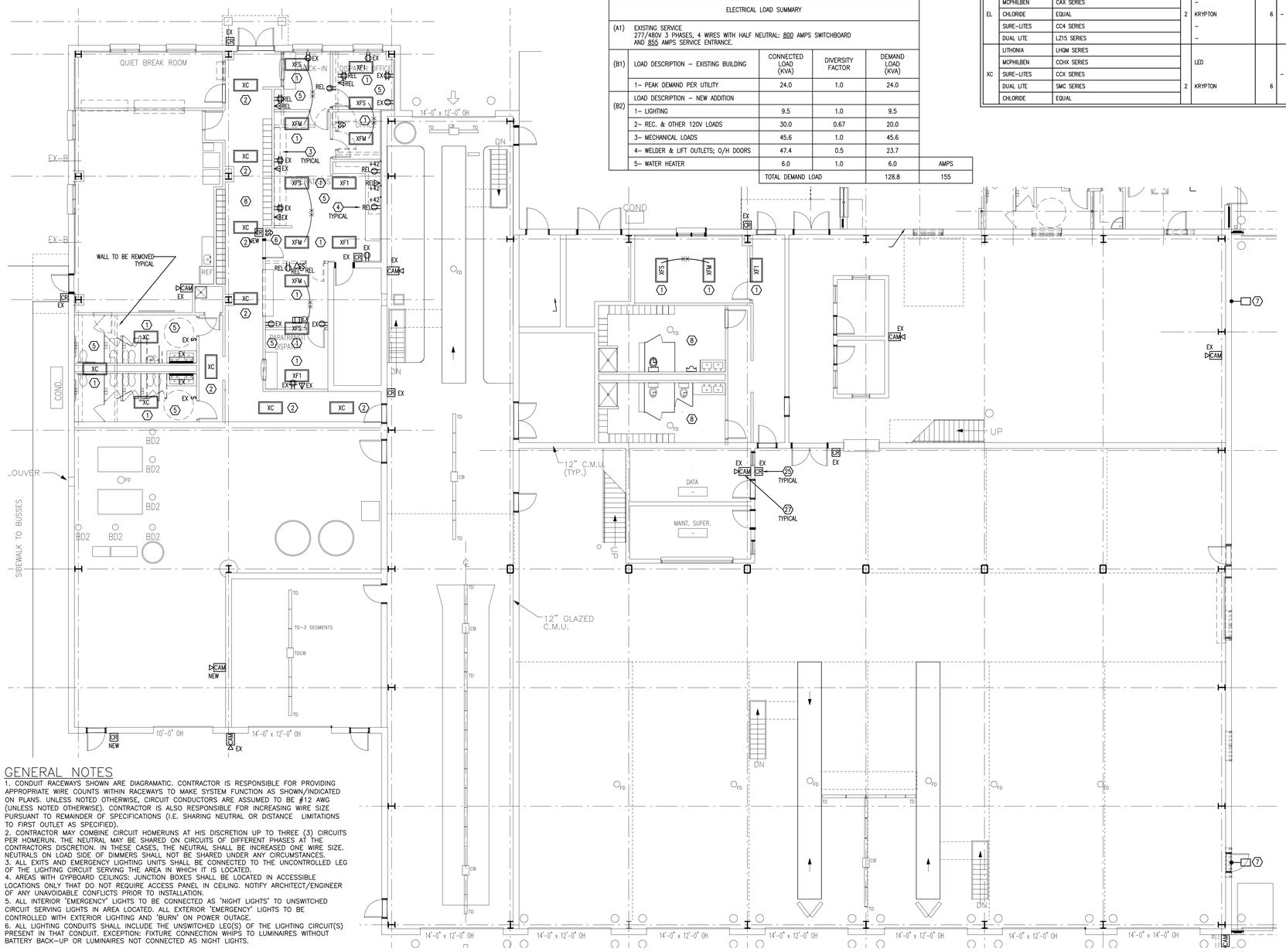

ELECTRICAL LOAD SUMMARY					
(A1)	EXISTING SERVICE 277/480V 3 PHASES, 4 WIRES WITH HALF NEUTRAL: 800 AMPS SWITCHBOARD AND 855 AMPS SERVICE ENTRANCE.				
(B1)	LOAD DESCRIPTION – EXISTING BUILDING	CONNECTED LOAD (KVA)	DIVERSITY FACTOR	DEMAND LOAD (KVA)	
	1– PEAK DEMAND PER UTILITY	24.0	1.0	24.0	
(B2)	LOAD DESCRIPTION – NEW ADDITION				
	1– LIGHTING	9.5	1.0	9.5	
	2– REC. & OTHER 120V LOADS	30.0	0.67	20.0	
	3– MECHANICAL LOADS	45.6	1.0	45.6	
	4– WELDER & LIFT OUTLETS; O/H DOORS	47.4	0.5	23.7	
	5– WATER HEATER	6.0	1.0	6.0	AMPS
	TOTAL DEMAND LOAD			128.8	155

INTERIOR LUMINAIRE SCHEDULE

MARK	MANUFACTURER	CATALOG NUMBER	LAMP(S) #	LAMP(S) TYPE	LAMP(S) WATT.	BALLAST(S) #	BALLAST(S) TYPE	BALLAST(S) WATT.	FIXTURE WATT.	FIXTURE VOLTAGE	MOUNTING	REMARKS
	LITHONIA	AF SERIES		–								SWIVEL STEM MOUNTED INDUSTRIAL FLUORESCENT FIXTURE
	DAY-BRITE	1F SERIES		32 WATT T8								WITH 10% UPLIGHT; WHITE ENAMEL REFLECTOR; ELECTRONIC
F	LSI MIDWEST	INDUSTRIAL 230 SERIES	2	FLUORESCENT	32	1	2-LAMP ELECTRONIC	–	–	120/277	PENDANT MOUNTED	BALLAST; (2) T8/35K 32 WATT LAMPS
	METALUX	DIM SERIES		4100° K							9'-0" AFF	–
	COLUMBIA	KL SERIES		–								–
	LITHONIA	VDC SERIES		–								CORNER MOUNT LINEAR FLUORESCENT; WALL MOUNTED 10'-0" AFF;
	DAY-BRITE	–		32 WATT T8								(2) 32 WATT T8 FLUORESCENT LAMPS; CLEAR POLYCARBONATE
G	LSI MIDWEST	–	2	FLUORESCENT	32	1	2-LAMP ELECTRONIC	–	–	120/277	WALL MOUNTED	LENS; 120/277V ELECTRONIC BALLAST
	METALUX	–		4100° K							10'-0" AFF	–
	COLUMBIA	–		–								–
	LITHONIA	–										SPOT FLOODLIGHT ASSEMBLY WITH (2) 100 WATT PULSE START METAL
	GARDCO	DF7 SERIES		PULSE START								HALIDE FLOODLIGHTS MOUNTED ON A WALL MOUNTED TWIN ARM
H	LUMARK	–	2	METAL HALIDE	100	2	SCWA	110	220	120/277	WALL MOUNTED	BRACKET; 120/277V SCWA BALLAST FOR EACH FLOODLIGHT; FLOODLIGHTS
	GE	–									10'-0" AFF	TO BE HORIZONTALLY AND VERTICALLY ADJUSTABLE
	COLUMBIA	–										–
	LITHONIA	I-BEAM SERIES		54 WATT T5 HO			2-LAMP ELECTRONIC					FLUORESCENT HIGH BAY; (6) 54 WATT T5HO FLUORESCENT AMALGAM
	GARDCO	–		FLUORESCENT AMALGAM			W/ 5-YEAR WARRANTY					LAMPS; 120/277V 'COOL RUNNING' ELECTRONIC BALLASTS; INBOARD/
I	LUMARK	–	6	4100° K; (80% OR	54	3	@ 55°C	110	330	120/277	STEM PENDANT	OUTBOARD WIRING FOR TRI-LEVEL LIGHTING
	GE	–		MORE LIGHT OUTPUT			(EQUAL TO ADVANCE				MOUNTED 18'-0"	–
	COLUMBIA	–		FROM -5°C TO +65°C)			COOL RUNNING)				AFF TO BOTTOM	–
	LITHONIA	AVANTE SERIES				1	4-LAMP ELECTRONIC	115				2'x4' LAY-IN DIRECT/INDIRECT TROFFER WITH (3) 32 WATT T8 FLUOR.
LM	DAY-BRITE	ARIOSO SERIES		32 WATT T8								LAMPS; METAL DIFFUSER WITH ROUND HOLES & STRAIGHT BLADE LOUVER;
	METALUX	OVATION SERIES	6	FLUORESCENT	32				173	120/277	CEILING RECESSED	120/277V; ELECTRONIC BALLASTS; INBOARD-OUTBOARD WIRING;
LS	LSI MIDWEST	EQUAL		4100° K		1	2-LAMP ELECTRONIC	58				LM(MASTER)/LS(SATELLITE)=(2) TROFFERS W/ LABOR SAVING TANDEM
	COLUMBIA	EQUAL										CONNECTION (EC TO VERIFY WHIP LENGTH)
	LITHONIA	ELM2 SERIES		–								CONTEMPORARY THERMOPLASTIC 2-HEAD EMERGENCY LIGHTING UNIT;
	MCPHILBEN	CAX SERIES		–								120/277V INPUT; 6V MAINTENANCE-FREE LEAD CALCIUM BATTERY;
EL	CHLORIDE	EQUAL	2	KRYPTON	6	–	N/A	N/A	16	120/277	WALL MOUNTED	6 WATT KRYPTON LAMPS; WHITE HOUSING;
	SURE-LITES	CC4 SERIES		–							96" AFF	–
	DUAL LITE	LZ15 SERIES		–								–
	LITHONIA	LHQM SERIES										CONTEMPORARY THERMOPLASTIC COMBINATION LED EXIT AND 2-HEAD
	MCPHILBEN	CCHX SERIES		LED					5		CEILING SURFACE	EMERGENCY LIGHTING UNIT (6 WATT KRYPTON LAMPS); WHITE HOUSING;
XC	SURE-LITES	CCX SERIES				–	–	–		120/277	OR WALL MOUNTED	RED PANEL; SINGLE FACE; 120/277V; 6V MAINTENANCE-FREE LEAD
	DUAL LITE	SMC SERIES	2	KRYPTON	6				12		12" ABOVE DOOR	CALCIUM BATTERY; UNIVERSAL MOUNTING
	CHLORIDE	EQUAL										

ELECTRICAL LEGEND

A NL a	2x4 RECESSED LIGHTING FIXTURE. SEE LUMINAIRE SCHEDULE FOR DESCRIPTION. "A" DENOTES TYPE, "a" DENOTES SWITCHING DESIGNATION, "NL" DENOTES LIGHT CONNECTED AS NIGHT LIGHT
A_a	DOWNLIGHT FIXTURE. SEE LUMINAIRE SCHEDULE FOR DESCRIPTION. "A" DENOTES TYPE, "a" DENOTES SWITCHING DESIGNATION
A_a A_a	WALL MOUNTED LIGHTING FIXTURE. SEE LUMINAIRE SCHEDULE FOR DESCRIPTION. "A" DENOTES TYPE, "a" DENOTES SWITCHING DESIGNATION
A_a	PENDANT MOUNTED LIGHTING FIXTURE. SEE LUMINAIRE SCHEDULE FOR DESCRIPTION. "A" DENOTES TYPE, "a" DENOTES SWITCHING DESIGNATION
a NL	SHADING INDICATES LUMINAIRE TO BE PROVIDED WITH EMERGENCY BATTERY BACK-UP FOR 2-LAMPS. "NL" DENOTES LIGHT OR PORTION OF LIGHT CONNECTED AS NIGHT LIGHT.
	EMERGENCY BATTERY UNIT WITH 2 HEADS. SEE LUMINAIRE SCHEDULE FOR DESIGNATION "A" DENOTES TYPE
	EXIT LIGHTING FIXTURE. SEE LUMINAIRE SCHEDULE FOR DESCRIPTION. "A" DENOTES TYPE
PEC H	EXTERIOR LIGHTING PHOTOCELL
$	SINGLE POLE WALL SWITCH
$2	DOUBLE POLE WALL SWITCH
$3	THREE-WAY WALL SWITCH
$4	FOUR-WAY WALL SWITCH
$$	TWO SINGLE POLE WALL SWITCHES FOR DUAL LEVEL LIGHTING CONTROL
$3$3	TWO THREE-WAY WALL SWITCHES FOR DUAL LEVEL LIGHTING CONTROL
$K	SINGLE POLE WALL SWITCH, KEY OPERATED
$D	LIGHTING DIMMER SWITCH, SIZED FOR MAXIMUM CONNECTED LOAD
$M	MOTOR RATED TOGGLE SWITCH
$WP	SINGLE POLE WALL SWITCH WITH WEATHERPROOF COVER
$a	SINGLE POLE WALL SWITCH, "a" DENOTES FIXTURES CONTROLLED
$F	FAN CONTROL
	RACEWAY CONCEALED IN WALL OR ABOVE CEILING
	RACEWAY CONCEALED IN SLAB, BELOW SLAB OR BELOW GRADE
	RACEWAY/WIRING TURNED UP
	RACEWAY/WIRING TURNED DOWN
	RACEWAY STUBBED OUT
	RACEWAY EXPOSED
L1-1	CIRCUIT HOMERUN TO PANELBOARD. LETTERS AND NUMBERS DENOTE PANELBOARD AND CIRCUIT NUMBER.
	SINGLE RECEPTACLE OUTLET
	DUPLEX RECEPTACLE OUTLET; 'G' = GFCI TYPE; 'WP' = PROVIDE WEATHERPROOF COVER
	DOUBLE DUPLEX RECEPTACLE OUTLET; 'G' = GFCI TYPE; 'WP' = PROVIDE WEATHERPROOF COVER
	SPECIAL RECEPTACLE, NEMA DESIGNATION AS SHOWN ON THE PLANS
J	JUNCTION BOX, CODE SIZED
	NEC-REQUIRED GROUNDING FOR SERVICE OR SEPARATELY DERIVED SYSTEM
	GROUND ROD WITH 10'-0" #4/0 PIGTAIL
FACP	FIRE ALARM SYSTEM CONTROL PANEL
FAA	FIRE ALARM SYSTEM ANNUNCIATOR PANEL
FATC	FIRE ALARM SYSTEM TERMINAL CABINET
NAC	FIRE ALARM SYSTEM NOTIFICATION APPLIANCE CIRCUIT EXTENDER PANEL
ARA	AREA OF RESCUE ANNUNCIATOR PANEL
ARC	AREA OF RESCUE CALL STATION
F	MANUAL PULL STATION
H R	AUTOMATIC HEAT DETECTOR "H" DENOTES FIXED, "R" DENOTES 135° RATE OF RISE
S P	SMOKE DETECTOR "P" DENOTED PHOTOELECTRONIC, "I" DENOTES IONIZATION, "D" DENOTES DUCT DETECTOR, "E" DENOTES EMERGENCY RECALL
F	FIRE ALARM SYSTEM HORN/STROBE COMBINATION UNIT
S	FIRE ALARM SYSTEM STROBE ONLY UNIT
R	FIRE ALARM SYSTEM REMOTE ALARM INDICATING LIGHT
	277/480V PANELBOARD
	120/208V PANELBOARD
T1	DRY-TYPE TRANSFORMER
5	MOTOR; NUMBER INDICATES HORSEPOWER
J	DISCONNECT SWITCH, SEE SCHEDULE ON DRAWING EP1.1
	PAGING/INTERCOM SYSTEM SPEAKER (CEILING MOUNTED)
MD	INTRUSION DETECTION SYSTEM MOTION SENSOR
D	LIGHTING CONTROL DUAL TECHNOLOGY OCCUPANCY SENSOR
DC	INTRUSION DETECTION SYSTEM DOOR CONTACTS
SEC	SECURITY PANEL
TV	CATV OUTLET
T	TELE/DATA OUTLET
CAM	SECURITY SYSTEM CAMERA
CR	ACCESS CONTROL SYSTEM CARD READER
	FLOORBOX

NOTE: NOT ALL SYMBOLS LISTED ARE USED

GENERAL NOTES

1. CONDUIT RACEWAYS SHOWN ARE DIAGRAMATIC. CONTRACTOR IS RESPONSIBLE FOR PROVIDING APPROPRIATE WIRE COUNTS WITHIN RACEWAYS TO MAKE SYSTEM FUNCTION AS SHOWN/INDICATED ON PLANS. UNLESS NOTED OTHERWISE, CIRCUIT CONDUCTORS ARE ASSUMED TO BE #12 AWG (UNLESS NOTED OTHERWISE). CONTRACTOR IS ALSO RESPONSIBLE FOR INCREASING WIRE SIZE PURSUANT TO REMAINDER OF SPECIFICATIONS (I.E. SHARING NEUTRAL OR DISTANCE LIMITATIONS TO FIRST OUTLET AS SPECIFIED).
2. CONTRACTOR MAY COMBINE CIRCUIT HOMERUNS AT HIS DISCRETION UP TO THREE (3) CIRCUITS PER HOMERUN. THE NEUTRAL MAY BE SHARED ON CIRCUITS OF DIFFERENT PHASES AT THE CONTRACTORS DISCRETION. IN THESE CASES, THE NEUTRAL SHALL BE INCREASED ONE WIRE SIZE. NEUTRALS ON LOAD SIDE OF DIMMERS SHALL NOT BE SHARED UNDER ANY CIRCUMSTANCES.
3. ALL EXITS AND EMERGENCY LIGHTING UNITS SHALL BE CONNECTED TO THE UNCONTROLLED LEG OF THE LIGHTING CIRCUIT SERVING THE AREA IN WHICH IT IS LOCATED.
4. AREAS WITH GYPBOARD CEILINGS: JUNCTION BOXES SHALL BE LOCATED IN ACCESSIBLE LOCATIONS ONLY THAT DO NOT REQUIRE ACCESS PANEL IN CEILING. NOTIFY ARCHITECT/ENGINEER OF ANY UNAVOIDABLE CONFLICTS PRIOR TO INSTALLATION.
5. ALL INTERIOR "EMERGENCY" LIGHTS TO BE CONNECTED AS 'NIGHT LIGHTS" TO UNSWITCHED CIRCUIT SERVING LIGHTS IN AREA LOCATED. ALL EXTERIOR "EMERGENCY" LIGHTS TO BE CONTROLLED WITH EXTERIOR LIGHTING AND 'BURN' ON POWER OUTAGE.
6. ALL LIGHTING CONDUITS SHALL INCLUDE THE UNSWITCHED LEG(S) OF THE LIGHTING CIRCUIT(S) PRESENT IN THAT CONDUIT. EXCEPTION: FIXTURE CONNECTION WHIPS TO LUMINAIRES WITHOUT BATTERY BACK-UP OR LUMINAIRES NOT CONNECTED AS NIGHT LIGHTS.

1 / E1.1 EXISTING FLOOR PLAN
REFER TO GRAPHIC SCALE

0 4 8 16 24
GRAPHIC SCALE IN FEET 1/8" = 1'-0"

TTA

ADDITIONS TO MAINTENANCE FACILITY

5201 NELSON ROAD (MAINTENANCE BLDG)
5210 NELSON ROAD (VACANT LOT)
CARY, NORTH CAROLINA

COMPLETE FACILITIES SOLUTIONS

MOSER MAYER PHOENIX ASSOCIATES, PA

328 E. Market Street
Suite 200
Greensboro, N. C. 27401
Telephone 336-373-9800
Fax 336-373-0077

NORTH CAROLINA PROFESSIONAL SEAL 23990 ENGINEER ROBERT B. KIME, III

MOSER MAYER PHOENIX ASSOCIATES, P.A. CERT. NO. C-784 NORTH CAROLINA GREENSBORO, N.C.

THIS DRAWING IS THE PROPERTY OF MOSER MAYER PHOENIX ASSOCIATES, P.A. AND IS NOT TO BE COPIED OR REPRODUCED IN PART OR WHOLE WITHOUT PERMISSION.

MULKEY ENGINEERS & CONSULTANTS
PO Box 33127
Raleigh, N.C.
(919) 851-1912
(919) 851-1918 (FAX)
WWW.MULKEYINC.COM

RECORD DRAWING DISCLAIMER

TO THE BEST OF OUR KNOWLEDGE, THESE DRAWINGS HAVE BEEN REVISED TO REFLECT CHANGES MADE DURING THE CONSTRUCTION PROCESS, BASED UPON THE MARKED-UP DRAWINGS AND OTHER DATA FURNISHED TO THE ARCHITECT BY THE CONTRACTOR OR CONTRACTORS. THE ARCHITECT DOES NOT ASSURE THE ACCURACY OF THAT INFORMATION OR TAKE RESPONSIBILITY FOR ANY ERROR OR OMISSION INCORPORATED INTO THE DRAWINGS AS A RESULT. THE OWNER IS ADVISED TO OBTAIN INDEPENDENT VERIFICATION PRIOR TO USING THE INFORMATION CONTAINED HEREIN.

REVISIONS

NO.	DATE	DESCRIPTION
	01-28-08	RECORD DRAWINGS

DATE	APRIL 28, 2006
PROJECT NUMBER	05111.00 (05156.00)
SCALE	AS NOTED
DRAWN BY	DRNBY

SYMBOLS; LUMINAIRE SCHEDULE; DEMO PLAN

E1.1

PANEL-H6

CKTS: 30 RATING: 277/480V LOCATION: BUS BAY ADDITION — NO MAIN BREAKER
ENCL: NEMA-1 MOUNTING: SURFACE FED FROM: 100A-3P CB IN EXISTING PANEL-MDP — EQUIP. GROUND BUS YES

LOAD SERVED	VA PER PHASE A	B	C	CKT BRKR	CKT NO.	CKT NO.	CKT BRKR	VA PER PHASE A	B	C	LOAD SERVED
LTG-WALL-BUS BAY	1540			20/1	1	2	20/1	–			SPARE
LTG-PENDANT-BUS BAY		2520		20/1	3	4	20/1		–		SPARE
LTG-WALL-BUS BAY			1540	20/1	5	6	20/1			–	SPARE
SPARE	–			20/1	7	8	20/1	–			SPARE
SPARE		–		20/1	9	10	20/1		–		SPARE
SPARE			–	20/1	11	12	20/1			–	SPARE
SPACE ONLY	–			–	13	14	–	–			SPACE ONLY
SPACE ONLY		–		–	15	16	–		–		SPACE ONLY
SPACE ONLY			–	–	17	18	–			–	SPACE ONLY
	776				19	20		1552			(4) MOTORIZED DOORS
EF-23 & 24 (3/4 HP EACH)		776		15/3	21	22	15/3		1552		3/4 HP EACH
1/2"C – 3#12 & 1#12 EG			776		23	24				1552	1/2"C – 3#12 & 1#12 EG
	942				25	26		9720			
EF-25 (2 HP)		942		15/3	27	28	70/3		12000		PANEL-L6 VIA
1/2"C – 3#12 & 1#12 EG			942		29	30				12360	45 KVA TRANSFORMER
SUB-TOTAL "B"	3258	4238	3258	100 BUS		SUB-TOTAL "A"		11272	13552	13912	MIN. 14,000 A.I.C. SYM. AMPERES
				100 LUGS		SUB-TOTAL "B"		3258	4238	3258	
				100 S/N		GRAND TOTAL		14530	17790	17170	LUGS/PHASE (1) – #3 LUGS/NEUT. (1) – #3
				TOP FEED		AMPS / PHASE		52	64	62	

REMARKS
CIRCUITS TO BE 1/2"C–2#12 & 1#12 EG U.N.O.
–
–

PANEL-H5

CKTS: 30 RATING: 277/480V LOCATION: ELECTRICAL ROOM — NO MAIN BREAKER
ENCL: NEMA-1 MOUNTING: SURFACE FED FROM: 100A-3P CB IN EXISTING PANEL-MDP — EQUIP. GROUND BUS YES

LOAD SERVED	VA PER PHASE A	B	C	CKT BRKR	CKT NO.	CKT NO.	CKT BRKR		VA PER PHASE A	B	C	LOAD SERVED
LTG-106-112	1200			20/1	1	2	20/1	*	1200			EXTERIOR LIGHTING
LTG-104,105,118-125,113-115		2640		20/1	3	4	20/1	*		700		EXTERIOR LIGHTING
LTG-101-103,116,117			1560	20/1	5	6	20/1				–	SPARE
SPARE	–			20/1	7	8	20/1		–			SPARE
SPARE		–		20/1	9	10	20/1			–		SPARE
SPARE			–	20/1	11	12	20/1				–	SPARE
SPACE ONLY	–			–	13	14	–		–			SPACE ONLY
SPACE ONLY		–		–	15	16	–			–		SPACE ONLY
SPACE ONLY			–	–	17	18	–				–	SPACE ONLY
	2000				19	20			4155			
6 KW WATER HEATER		2000		20/3	21	22	25/3			4155		RTU-1
1/2"C – 3#12 & 1#12 EG			2000		23	24					4155	3/4"C – 3#10 & 1#10 EG
	8640				25	26			5318			
PANEL-L5 VIA		9120		70/3	27	28	35/3			5318		RTU-2
30 KVA TRANSFORMER			8520		29	30					5318	3/4"C – 3#8 & 1#10 EG
SUB-TOTAL "B"	12440	12920	12320	100 BUS		SUB-TOTAL "A"			10673	10173	9473	MIN. 14,000 A.I.C. SYM. AMPERES
				100 LUGS		SUB-TOTAL "B"			12440	12920	12320	
				100 S/N		GRAND TOTAL			23113	23093	21793	LUGS/PHASE (1) – #3 LUGS/NEUT. (1) – #3
				TOP FEED		AMPS / PHASE			83	83	79	

REMARKS
CIRCUITS TO BE 1/2"C–2#12 & 1#12 EG U.N.O.
* CIRCUIT ROUTED THRU LTG CONTROL PNL-LC2
–

PANEL-L5

CKTS: 42 RATING: 120/208V LOCATION: ELECTRICAL ROOM #111 — 150A MAIN BREAKER
ENCL: NEMA-1 MOUNTING: SURFACE FED FROM: PANEL-H5 VIA 45 KVA TRANSFORMER — EQUIP. GROUND BUS YES

LOAD SERVED	VA PER PHASE A	B	C	CKT BRKR	CKT NO.	CKT NO.	CKT BRKR	VA PER PHASE A	B	C	LOAD SERVED
REC-O/H PROJECTOR-116	720			20/1	1	2	20/1	720			REC-123
REC-116		720		20/1	3	4	20/1		720		REC-123
REC-116			720	20/1	5	6	20/1			720	REC-122,125
REC-116	720			20/1	7	8	20/1	720			REC-126,127
REC-116		720		20/1	9	10	20/1		720		REC-FLOORBOX-124
REC-114			720	20/1	11	12	20/1			720	REC-124
REC-113	720			20/1	13	14	20/1	720			REC-REF-106
REC-117		720		20/1	15	16	20/1		720		REC-COUNTER-106
REC-102			720	20/1	17	18	20/1			720	REC-COUNTER-106
REC-103	720			20/1	19	20	20/1	720			REC-106
REC-104		720		20/1	21	22	20/1		720		REC – 106
REC-REF-105			720	20/1	23	24	20/1			–	SPARE
REC-MICROWAVE-105	720			20/1	25	26	20/1	–			SPARE
REC-105		720		20/1	27	28	20/1		720		REC-107,108,109
SPARE			–	20/1	29	30	20/1			500	DOOR BELL
SPARE	–			20/1	31	32	20/1	720			REC-ROOF,110,111
SPARE		–		15/1	33	34	20/1		500		HVAC CONTROLS
EF-26			700	15/1	35	36	20/1			–	SPARE
CU-8	1000			15/1	37	38		2640			
HP-1		1280		20/2	39	40	40/3		2640		AHU-1
			1280		41	42				2400	3/4"C – 3#8 & 1#10 EG
SUB-TOTAL "B"	4600	4980	4860	150 BUS		SUB-TOTAL "A"		6240	6740	5060	MIN. 10,000 A.I.C. SYM. AMPERES
				150 LUGS		SUB-TOTAL "B"		4600	4980	4860	
				150 S/N		GRAND TOTAL		10840	11720	9920	LUGS/PHASE (1) – #1/0 LUGS/NEUT. (1) – #1/0
				BOTT FEED		AMPS / PHASE		90	98	83	
						DIV. DEM. AMPS		72	76	71	

REMARKS
CIRCUITS TO BE 1/2"C–2#12 & 1#12 EG U.N.O.
–
–

PANEL-L6

CKTS: 42 RATING: 120/208V LOCATION: ELECTRICAL ROOM — 150A MAIN BREAKER
ENCL: NEMA-1 MOUNTING: SURFACE FED FROM: PANEL-H5 VIA 45 KVA TRANSFORMER — EQUIP. GROUND BUS YES

LOAD SERVED	VA PER PHASE A	B	C	CKT BRKR	CKT NO.	CKT NO.	CKT BRKR	VA PER PHASE A	B	C	LOAD SERVED
IFH-1A,1C	360			15/1	1	2	15/1	360			IFH-1B,1D
HOSE REEL-A,C		500		15/1	3	4	15/1		500		HOSE REEL-B,D
BLOCK HEATER-A			1000	20/1	5	6	20/1			1000	BLOCK HEATER-B
BLOCK HEATER-C	1000			20/1	7	8	20/1	1000			BLOCK HEATER-D
REC-BAY		720		20/1	9	10	20/1		720		REC-BAY
REC-BAY			720	20/1	11	12	20/1			720	REC-BAY
SPARE	–			20/1	13	14	20/1	–			SPARE
SPARE		–		20/1	15	16	20/1		–		SPARE
SPARE			–	20/1	17	18	20/1			–	SPARE
	1000				19	20	20/1	–			SPARE
REC-PORTABLE LIFT		1000		30/3	21	22	20/1		–		SPARE
3/4"C – 3#10 & 1#10 EG			1000		23	24	20/1			–	SPARE
	1000				25	26	20/1	–			SPARE
REC-PORTABLE LIFT		1000		30/3	27	28	50/2		3850		REC-WELDER
3/4"C – 3#10 & 1#10 EG			1000		29	30				3850	3/4"C – 2#8 & 1#10 EG
	1000				31	32	50/2	3850			REC-WELDER
REC-PORTABLE LIFT		1000		30/3	33	34			3850		3/4"C – 2#8 & 1#10 EG
3/4"C – 3#10 & 1#10 EG			1000		35	36	50/2			3850	REC-WELDER
	1000				37	38		3850			3/4"C – 2#8 & 1#10 EG
REC-PORTABLE LIFT		1000		30/3	39	40	50/2		3850		REC-WELDER
3/4"C – 3#10 & 1#10 EG			1000		41	42				3850	3/4"C – 2#8 & 1#10 EG
SUB-TOTAL "B"	5360	5220	5720	150 BUS		SUB-TOTAL "A"		9560	13270	13270	MIN. 10,000 A.I.C. SYM. AMPERES
				150 LUGS		SUB-TOTAL "B"		5360	5220	5720	
				150 S/N		GRAND TOTAL		14920	18490	18990	LUGS/PHASE (1) – #1/0 LUGS/NEUT. (1) – #1/0
				BOTT FEED		AMPS / PHASE		124	154	158	
						DIV. DEM. AMPS		81	100	103	

REMARKS
CIRCUITS TO BE 1/2"C–2#12 & 1#12 EG U.N.O.
–
–

FEEDER SCHEDULE
(POWER RISER ONLY)

MARK	WIRE & CONDUIT
1	2"C – 4#1/0 & 1#6 EG
2	1 1/4"C – 4#3 & 1#8 EG
3	3/4"C – 3#6 & 1#8 EG
4	3/4"C – 1#6 SG
5	3/4"C – 4#8 & 1#10 EG

POWER RISER NOTES:

1. PROVIDE (2) 100A–3P–480V CIRCUIT BREAKERS IN EXISTING PANEL–MDP TO SERVE NEW PANELS–H5 & H6.
2. PROVIDE NEW 50A–3P–208V CIRCUIT BREAKER IN EX. PANEL–EL1 TO SERVE NEW PANEL–EL2. RELOCATE CIRCUITS EL1–14,16,18 TO MAKE ROOM TO INSTALL NEW 3–POLE CB.

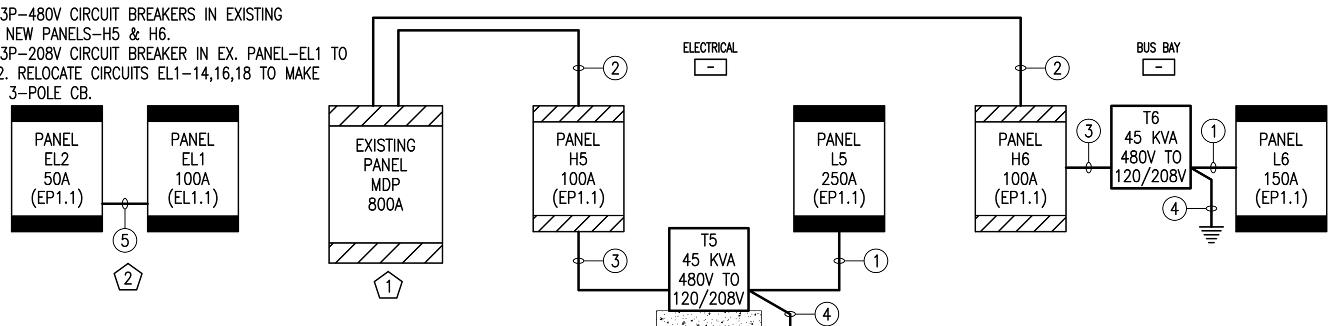

2 EP1.1 PARTIAL POWER RISER
NO SCALE

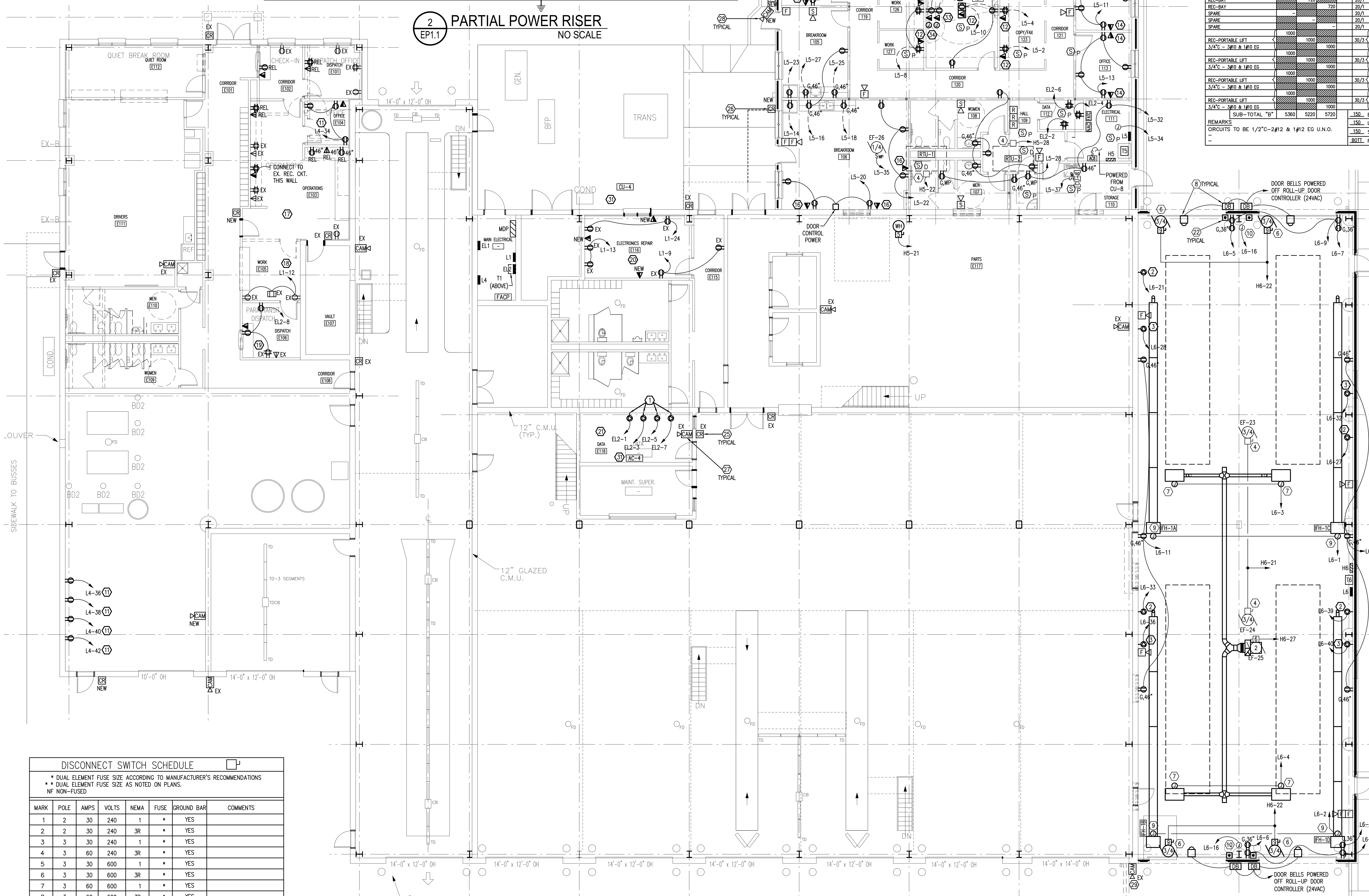

1 EP1.1 FIRST FLOOR - POWER PLAN
REFER TO GRAPHIC SCALE

GRAPHIC SCALE IN FEET 0 4 8 16 24 — 1/8" = 1'-0"

DISCONNECT SWITCH SCHEDULE

* DUAL ELEMENT FUSE SIZE ACCORDING TO MANUFACTURER'S RECOMMENDATIONS
* * DUAL ELEMENT FUSE SIZE AS NOTED ON PLANS.
NF NON–FUSED

MARK	POLE	AMPS	VOLTS	NEMA	FUSE	GROUND BAR	COMMENTS
1	2	30	240	1	*	YES	
2	2	30	240	3R	*	YES	
3	3	30	240	1	*	YES	
4	3	60	240	3R	*	YES	
5	3	30	600	1	*	YES	
6	3	30	600	3R	*	YES	
7	3	60	600	1	*	YES	
8	3	60	600	3R	*	YES	
9	3	30	600	1	NF	YES	
10	3	100	600	3R	*	YES	

GENERAL NOTES:

1. ALL NEW CONDUITS (TELE/DATA, POWER, LIGHTING, ETC.) EXTENDING FROM WALLS TO STRUCTURE ABOVE SHALL BE ROUTED IN WALLS THAT EXTEND TO THE STRUCTURE.

POWER PLAN NOTES:

1. NEMA L5–30 (30A–120V–1P) TWISTLOCK RECEPTACLE OUTLET SERVING NEW/FUTURE RACK UPS.
2. NEMA L5–30 (30A–208V–3P) TWISTLOCK RECEPTACLE SERVING PORTABLE LIFT SYSTEM.
3. NEMA 6–50 (50A–208V–2P) STRAIGHT BLADE RECEPTACLE SERVING WELDER.
4. DISCONNECT SWITCH PROVIDED WITH EQUIPMENT BY EQUIPMENT MANUFACTURER.
5. RECEPTACLE AND TELE/DATA OUTLET MOUNTED IN CEILING TO SERVE OVERHEAD PROJECTOR. COORDINATE EXACT LOCATION WITH PROJECTOR INSTALLER.
6. OVERHEAD DOOR MOTOR. SEE DETAIL 8–E2.1.
7. JUNCTION BOX FOR POWER CONNECTION TO OVERHEAD HOSE REEL. COORDINATE EXACT LOCATION WITH HOSE REEL INSTALLER.
8. PROVIDE 24V CONBINATION BUZZER/STROBE WITH DOORBELL PUSHBUTTON TO MATCH EXISTING DEVICES AT DOCK DOORS. CAULK OVER PLATE TO SEAL.
9. JUNCTION BOX FOR POWER CONNECTION TO INFRARED HEATER. COORDINATE EXACT LOCATION WITH HEATER INSTALLER.
10. JUNCTION BOX FOR POWER CONNECTION TO FUEL/FLUID CONTROL SYSTEM. ALSO PROVIDE 1/2" EMPTY CONDUIT WITH PULL STRING TO FUEL/FLUID SYSTEM CONTROLLER IN VAULT #E107. COORDINATE EXACT LOCATION(S) WITH CONTROL SYSTEM INSTALLER TO MATCH EXISTING.
11. PROVIDE NEW 20A–1P–120V CIRCUIT BREAKER IN EX. PANEL–L4.
12. ROUTE TELE/DATA CONDUIT UNDERGROUND TO DATA #112.
13. STUB TELE/DATA CONDUIT IN ACCESSIBLE LOCATION ABOVE LAY–IN CEILING IN TRAINING #116.
14. STUB TELE/DATA CONDUIT ABOVE BOTTOM OF ROOF JOISTS ON THE (PLAN) EAST WALL. SEE NOTE #32.
15. STUB TELE/DATA CONDUIT ABOVE BOTTOM OF ROOF JOISTS ON THE (PLAN) WEST WALL. SEE NOTE #32.
16. STUB TELE/DATA CONDUIT IN ACCESSIBLE LOCATION ABOVE LAY–IN CEILING IN MEN'S ROOM #107.
17. ELECTRICAL DEVICES NOTED 'EX' THIS AREA ARE EXISTING TO REMAIN. DEVICES NOTED 'REL' HAVE BEEN RELOCATED TO LOCATION SHOWN. UNLESS NOTED OTHERWISE, EXTEND EXISTING CIRCUITRY TO NEW 'REL' DEVICE LOCATIONS.
18. CONNECT DEVICES INDICATED TO EXISTING CIRCUIT L1–12 SERVING FORMER TRAINING ROOM.
19. CONNECT EXISTING RECEPTACLE TO NEW EMERGENCY CIRCUIT SERVING DISPATCH ROOM.
20. RE–WORK EXISTING CIRCUITS SERVING THIS AREA AS SHOWN.
21. EXISTING CAMERA SYSTEM AND CARD ACCESS SYSTEM CONTROLS LOCATED IN THIS ROOM.
22. PUSHBUTTON SHALL BE PROVIDED WITH THE ROLL DOOR AND SHALL BE MOUNTED AND WIRED PER MANUFACTURER'S SPECIFICATIONS.
23. PROVIDE 24V BELL WITH DOORBELL PUSHBUTTON TO MATCH EXISTING OFFICE ENTRY DEVICES.
24. CONCRETE RECESSED FULLY ADJUSTABLE FLOOR BOX EQUIVALENT TO HUBBELL 3SFBC (EQUALS BY WIREMOLD AND STEEL CITY). PROVIDE WITH (1) DOUBLE DUPLEX RECEPTACLE AND (1) TELE/DATA OUTLET (DEVICES, CABLING, ETC. BY OWNER).
25. EXISTING CARD READER TO REMAIN.
26. NEW CARD READER LOCATION. EC TO PROVIDE OUTLET BOX 3/4" EMPTY CONDUIT STUB TO LOCAL DOOR ACCESS CONTROLS AND CONDUIT FOR DOOR CONTACTS, STRIKES, ETC. EC TO PROVIDE 3/4" EMPTY CONDUIT W/ PULL STRING FROM LOCAL DOOR CONTROLS HOME RUN TO DATA E118. EC TO PROVIDE EMERGENCY POWER CIRCUIT EL2–10 TO EACH NEW DOOR LOCATION FOR CARD ACCESS AND DOOR STRIKE POWER. GC TO PROVIDE DOOR HARDWARE, STRIKES, ETC. TO MATCH WITH CURRENT SYSTEM. CARD ACCESS SYSTEM READERS, CABLING, CONTROLS, ETC. PROVIDED BY OWNER. COORDINATE EXACT LOCATIONS, ETC. WITH OWNER PRIOR TO INSTALLATION.
27. EXISTING CAMERA TO REMAIN UNLESS NOTED OTHERWISE.
28. NEW CAMERA LOCATION. EC TO PROVIDE OUTLET BOX WITH 3/4" EMPTY CONDUIT W/ PULL STRING HOME RUN TO DATA E118. CAMERA, CABLING, ETC. PROVIDED BY OWNER. COORDINATE EXACT LOCATIONS, ETC. WITH OWNER PRIOR TO INSTALLATION.
29. EC TO RE–WORK EXISTING CAMERA CORNER MOUNT TO WALL MOUNT DUE TO BAY ADDITION.
30. CU–4 TO BE REPLACED. CHANGE EXISTING FUSES IN DISCONNECT TO MATCH NEW EQUIPMENT PER MANUFACTURER'S RECOMMENDATION. CHANGE EXISTING 20A–2P CIRCUIT BREAKER IN PANEL–L4 TO 30A–20. REMOVE EXISTING #12 AWG WIRE AND PULL NEW #10 AWG WIRE IN EXISTING CONDUIT.
31. AC–4 TO BE REPLACED. REMOVE EXISTING 2–POLE DISCONNECT AND REPLACE WITH 20A–1P SNAP SWITCH DISCONNECT. REMOVE EXISTING 15A–2P CIRCUIT BREAKER IN PANEL–L4 AND REPLACE WITH NEW 15A–1P CIRCUIT BREAKER. RE–USE EXISTING WIRE AND RE–LABEL AS APPROPRIATE.
32. WHERE TWO OUTLETS ARE LOCATED IN THE SAME WALL WITHIN 24" OF EACH OTHER THE CONDUIT STUBS MAY BE COMBINED WITH A 3/4"C BETWEEN THE OUTLETS AND A 1"C STUB TO AREA INDICATED.
33. TOP RECEPTACLE, DATA OUTLET, AND JUNCTION BOX SERVE WALL MOUNTED PROJECTOR. COORDINATE EXACT HEIGHT WITH PROJECTOR INSTALLER PRIOR TO ROUGH–IN. CONNECT DATA OUTLET TO DATA OUTLET BELOW VIA 3/4" CONDUIT AND THEN BACK TO DATA ROOM AS SPECIFIED IN NOTE–12.
34. JUNCTION BOXES FOR PROJECTOR CABLING (CABLING, DEVICES, AND FINAL FACE PLATE BY OTHERS) TO BE DOUBLE GANG EXTRA DEEP WITH SINGLE GANG PLASTER RING AND BLANK FACE PLATE. PROVIDE 1 1/4" EMPTY CONDUIT BETWEEN BOXES AND FROM BOTTOM JB TO FLOOR BOX.
35. JUNCTION BOX FOR PROJECTOR CABLING (CABLING, DEVICES, AND FINAL FACE PLATE BY OTHERS) TO BE DOUBLE GANG EXTRA DEEP WITH SINGLE GANG PLASTER RING AND BLANK FACE PLATE. PROVIDE 1 1/4" EMPTY CONDUIT TO ACCESSIBLE LOCATION ABOVE LAY–IN CEILING. COORDINATE LOCATION WITH PROJECTOR INSTALLER PRIOR TO ROUGH–IN.
36. PROVIDE CIRCUIT INDICATED TO MOTORIZED PROJECTOR SCREEN. COORDINATE EXACT LOCATION AND CONNECTION REQUIREMENTS WITH SCREEN INSTALLER PRIOR TO ROUGH–IN. PROVIDE 3–POSITION (RAISE–OFF–LOWER) SWITCH WITH CONTROL WIRING ADJACENT TO INSTRUCTOR'S DESK (COORDINATE LOCATION EXACT LOCATION WITH OWNER PRIOR TO ROUGH–IN).

ADDITIONS TO MAINTENANCE FACILITY

5201 NELSON ROAD (MAINTENANCE BLDG)
5210 NELSON ROAD (VACANT LOT)
CARY, NORTH CAROLINA

COMPLETE FACILITIES SOLUTIONS
MOSER MAYER PHOENIX ASSOCIATES, PA
328 E. Market Street
Suite 200
Greensboro, N.C. 27401
Telephone 336-373-9800
Fax 336-373-0077

NORTH CAROLINA PROFESSIONAL ENGINEER SEAL 23990 ROBERT B. KIME, III
MOSER MAYER PHOENIX ASSOCIATES P.A. REGISTERED ENGINEERING CORPORATION CERT. NO. C-784 NORTH CAROLINA GREENSBORO N.C.

THIS DRAWING IS THE PROPERTY OF MOSER MAYER PHOENIX ASSOCIATES, P.A. AND IS NOT TO BE COPIED OR REPRODUCED IN PART OR WHOLE WITHOUT PERMISSION.

MULKEY ENGINEERS & CONSULTANTS
PO Box 33127
Raleigh, N.C. 27636
(919) 851-1912
(919) 851-1918 (FAX)
WWW.MULKEYINC.COM

RECORD DRAWING DISCLAIMER

TO THE BEST OF OUR KNOWLEDGE, THESE DRAWINGS HAVE BEEN REVISED TO REFLECT CHANGES MADE DURING THE CONSTRUCTION PROCESS, BASED UPON THE MARKED-UP DRAWINGS AND OTHER DATA FURNISHED TO THE ARCHITECT BY THE CONTRACTOR OR CONTRACTORS. THE ARCHITECT DOES NOT ASSURE THE ACCURACY OF THAT INFORMATION OR TAKE RESPONSIBILITY FOR ANY ERROR OR OMISSION INCORPORATED INTO THE DRAWINGS AS A RESULT. THE OWNER IS ADVISED TO OBTAIN INDEPENDENT VERIFICATION PRIOR TO USING THE INFORMATION CONTAINED HEREIN.

REVISIONS

NO.	DATE	DESCRIPTION
	01-26-08	RECORD DRAWINGS

DATE	APRIL 28, 2006
PROJECT NUMBER	05111.00 (05156.00)
SCALE	AS NOTED
DRAWN BY	DRNBY

FIRST FLOOR - POWER PLAN; PANEL SCHEDULES

EP1.1

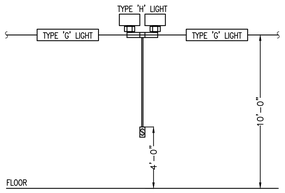

2 EL1.1 TYPE 'H' LUMINAIRE MOUNTING ELEVATION
NO SCALE

PANEL–EL2

OCTS: 18 | RATING: 120/208V | LOCATION: MAIN ELECTRICAL ROOM | MAIN BREAKER: NO
ENCL: NEMA–1 | MOUNTING: SURFACE | FED FROM: 50A–3P CB IN PANEL–EL1 | EQUIP. GROUND BUS: YES

LOAD SERVED	VA PER PHASE A	B	C		CKT BRKR	CKT NO.	CKT NO.	CKT BRKR		VA PER PHASE A	B	C	LOAD SERVED
REC–DATA RACK UPS–E118	720			1	30/1	1	2	20/1	1	540			REC–DATA–112
REC–DATA RACK UPS–E118		720			30/1	3	4	20/1	1		540		REC–DATA–112
REC–DATA RACK UPS–E118			720	1	30/1	5	6	20/1	1			540	REC–DATA–112
REC–DATA RACK UPS–E118	720			1	30/1	7	8	20/1		540			REC–DISPATCH–E106
SPARE					20/1	9	10	20/1			540		CARD ACCESS CONTROLS
SPARE					20/1	11	12	20/1					SPARE
SPARE					20/1	13	14	20/1	2	540			EF–17
SPARE					20/1	15	16	20/1	2		540		EF–3
SPARE					20/1	17	18	20/1	2			540	UH–2,3
SUB–TOTAL "B"	1440	720	720		100 BUS			SUB–TOTAL "A"		1620	1620	1080	MIN. 10,000 A.I.C. SYM. AMPERES
					100 LUGS			SUB–TOTAL "B"		1440	720	720	
					100 S/N			GRAND TOTAL		3060	2340	1800	LUGS/PHASE (1) = #3
					BOTT FEED			AMPS / PHASE		26	20	15	LUGS/NEUT. (1) = #3

REMARKS
ALL CIRCUITS 1/2"C– 2#12 & 1#12EG U.N.O.
1–CIRCUIT TO BE 1/2"C–2#10 & 1#10EG
2–CIRCUIT RELOCATED FROM PANEL–EL1

GENERAL NOTES:

1. ALL NEW CONDUITS (TELE/DATA, POWER, LIGHTING, ETC.) EXTENDING FROM WALLS TO STRUCTURE ABOVE SHALL BE ROUTED IN WALLS THAT EXTEND TO THE STRUCTURE.
2. ALL EXITS AND EMERGENCY LIGHTING UNITS SHALL BE CONNECTED TO THE UNCONTROLLED LEG OF THE LIGHTING CIRCUIT SERVING THE AREA IN WHICH IT IS LOCATED.
3. AREAS WITH GYPBOARD CEILINGS: JUNCTION BOXES SHALL BE LOCATED IN ACCESSIBLE LOCATIONS ONLY THAT DO NOT REQUIRE ACCESS PANEL IN CEILING. NOTIFY ARCHITECT/ENGINEER OF ANY UNAVOIDABLE CONFLICTS PRIOR TO INSTALLATION.
4. ALL INTERIOR "EMERGENCY" LIGHTS TO BE CONNECTED AS "NIGHT LIGHTS" TO UNSWITCHED CIRCUIT SERVING LIGHTS IN AREA LOCATED. ALL EXTERIOR "EMERGENCY" LIGHTS TO BE CONTROLLED WITH EXTERIOR LIGHTING AND "BURN" ON POWER OUTAGE.
5. ALL LIGHTING CONDUITS SHALL INCLUDE THE UNSWITCHED LEG(S) OF THE LIGHTING CIRCUIT(S) PRESENT IN THAT CONDUIT. EXCEPTION: FIXTURE CONNECTION WHIPS TO LUMINAIRES WITHOUT BATTERY BACK–UP OR LUMINARES NOT CONNECTED AS NIGHT LIGHTS.

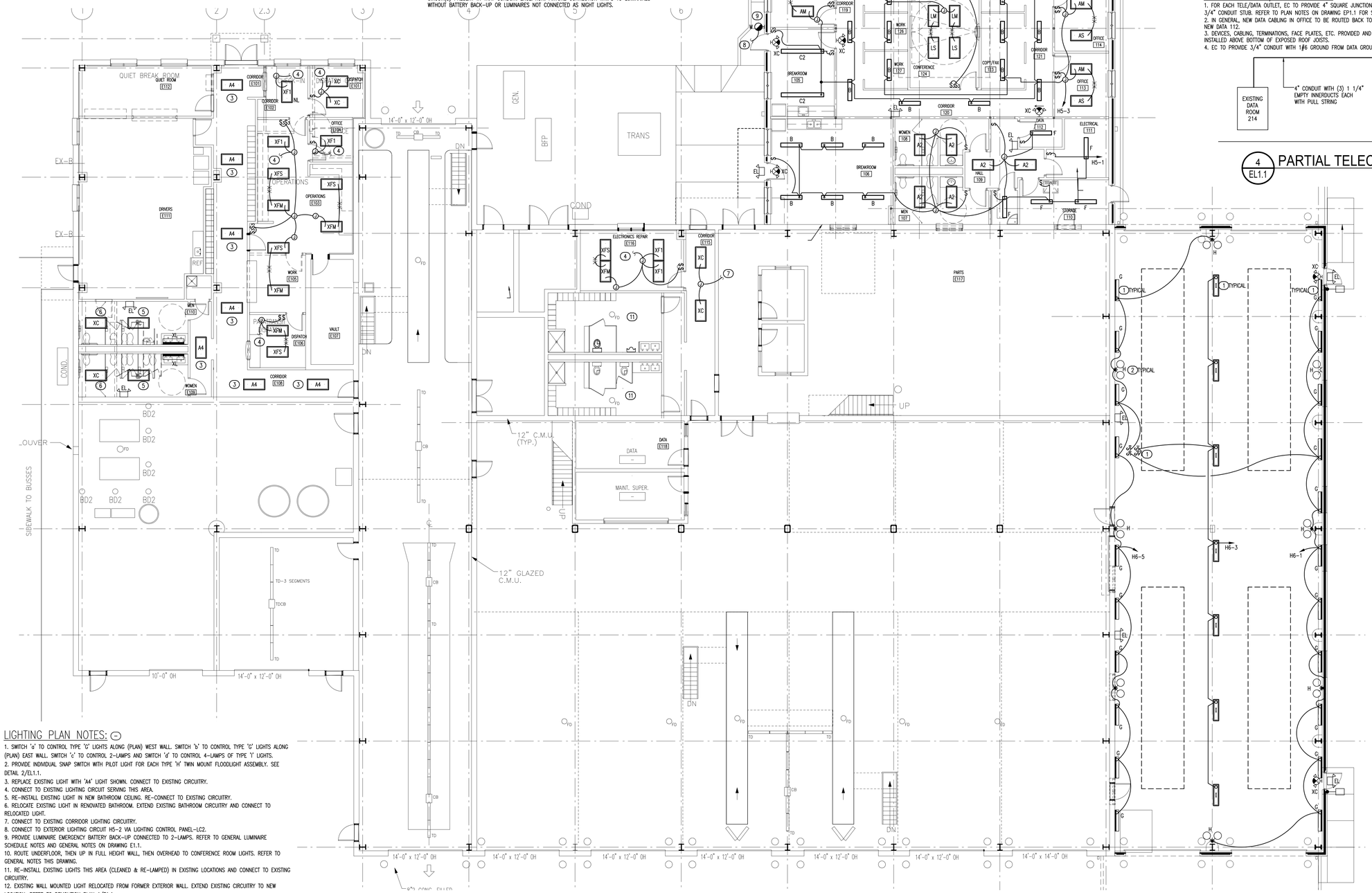

GENERAL FIRE ALARM SYSTEM NOTES:

1. ALL FIRE ALARM SYSTEM WORK (DEVICES, WIRING, ETC) TO MATCH EXISTING SYSTEM.
2. CONTRACTOR TO PROVIDE ALL EXPANSION MODULES, RE–PROGRAMMING, ETC. TO MAIN FIRE ALARM CONTROL PANEL TO ALLOW FOR INSTALLATION OF NEW DEVICES INDICATED.
3. CONTRACTOR SHALL INCLUDE ALL PERMITS, INSPECTIONS, FINAL NFPA 72 REPORT ON ALL NEW DEVICES INSTALLED AS WELL AS TESTING 10% OF EXISTING SYSTEM DEVICES, ETC.

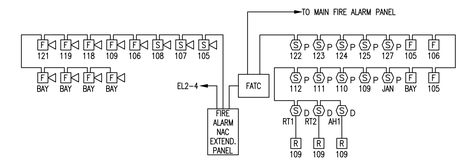

FIRST FLOOR

3 EL1.1 PARTIAL FIRE ALARM RISER
NO SCALE

GENERAL TELE/DATA NOTES:

1. FOR EACH TELE/DATA OUTLET, EC TO PROVIDE 4" SQUARE JUNCTION BOX W/ SINGLE GANG PLASTER RING AND 3/4" CONDUIT STUB. REFER TO PLAN NOTES ON DRAWING EP1.1 FOR STUB ROUTING REQUIREMENTS.
2. IN GENERAL, NEW DATA CABLING IN OFFICE TO BE ROUTED BACK TO EXISTING DATA E118 THROUGH 4" CONDUIT IN NEW DATA 112.
3. DEVICES, CABLING, TERMINATIONS, FACE PLATES, ETC. PROVIDED AND INSTALLED BY OWNER. CABLING TO BE INSTALLED ABOVE BOTTOM OF EXPOSED ROOF JOISTS.
4. EC TO PROVIDE 3/4" CONDUIT WITH 1#6 GROUND FROM DATA GROUND IN E118 TO NEW DATA 112.

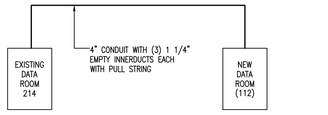

4 EL1.1 PARTIAL TELECOM RISER
NO SCALE

LIGHTING PLAN NOTES:

1. SWITCH 'a' TO CONTROL TYPE 'G' LIGHTS ALONG (PLAN) WEST WALL. SWITCH 'b' TO CONTROL TYPE 'G' LIGHTS ALONG (PLAN) EAST WALL. SWITCH 'c' TO CONTROL 2–LAMPS AND SWITCH 'd' TO CONTROL 4–LAMPS OF TYPE 'I' LIGHTS.
2. PROVIDE INDIVIDUAL SNAP SWITCH WITH PILOT LIGHT FOR EACH TYPE 'H' TWIN MOUNT FLOODLIGHT ASSEMBLY. SEE DETAIL 2/EL1.1.
3. REPLACE EXISTING LIGHT WITH 'A4' LIGHT SHOWN. CONNECT TO EXISTING CIRCUITRY.
4. CONNECT TO EXISTING LIGHTING CIRCUIT SERVING THIS AREA.
5. RE–INSTALL EXISTING LIGHT IN NEW BATHROOM CEILING. RE–CONNECT TO EXISTING CIRCUITRY.
6. RELOCATE EXISTING LIGHT IN RENOVATED BATHROOM. EXTEND EXISTING BATHROOM CIRCUITRY AND CONNECT TO RELOCATED LIGHT.
7. CONNECT TO EXISTING CORRIDOR LIGHTING CIRCUITRY.
8. CONNECT TO EXTERIOR LIGHTING CIRCUIT H5–2 VIA LIGHTING CONTROL PANEL–LC2.
9. PROVIDE LUMINAIRE EMERGENCY BATTERY BACK–UP CONNECTED TO 2–LAMPS. REFER TO GENERAL LUMINAIRE SCHEDULE NOTES AND GENERAL NOTES ON DRAWING E1.1.
10. ROUTE UNDERFLOOR, THEN UP IN FULL HEIGHT WALL, THEN OVERHEAD TO CONFERENCE ROOM LIGHTS. REFER TO GENERAL NOTES THIS DRAWING.
11. RE–INSTALL EXISTING LIGHTS THIS AREA (CLEANED & RE–LAMPED) IN EXISTING LOCATIONS AND CONNECT TO EXISTING CIRCUITRY.
12. EXISTING WALL MOUNTED LIGHT RELOCATED FROM FORMER EXTERIOR WALL. EXTEND EXISTING CIRCUITRY TO NEW LOCATION. REFER TO DEMOLITION PLAN 1/E1.1.

1 EL1.1 FIRST FLOOR - LIGHTING PLAN
REFER TO GRAPHIC SCALE

0 4 8 16 24
GRAPHIC SCALE IN FEET 1/8" = 1'-0"

TTA

ADDITIONS TO MAINTENANCE FACILITY

5201 NELSON ROAD (MAINTENANCE BLDG)
5210 NELSON ROAD (VACANT LOT)
CARY, NORTH CAROLINA

COMPLETE FACILITIES SOLUTIONS

MOSER MAYER PHOENIX ASSOCIATES, PA

328 E. Market Street
Suite 200
Greensboro, N.C. 27401
Telephone 336-373-9800
Fax 336-373-0077

NORTH CAROLINA PROFESSIONAL SEAL 23990 ENGINEER ROBERT B. KIME

MOSER MAYER PHOENIX ASSOCIATES P.A. ENGINEERING CERTIFICATE NUMBER CERT. NO. C-784 GREENSBORO, N.C.

THIS DRAWING IS THE PROPERTY OF MOSER MAYER PHOENIX ASSOCIATES, P.A. AND IS NOT TO BE COPIED OR REPRODUCED IN PART OR WHOLE WITHOUT PERMISSION.

MULKEY ENGINEERS & CONSULTANTS
PO Box 33127
RALEIGH, N.C. 27636
(919) 851-1912
(919) 851-1918 (FAX)
WWW.MULKEYINC.COM

RECORD DRAWING DISCLAIMER

TO THE BEST OF OUR KNOWLEDGE, THESE DRAWINGS HAVE BEEN REVISED TO REFLECT CHANGES MADE DURING THE CONSTRUCTION PROCESS, BASED UPON THE MARKED–UP DRAWINGS AND OTHER DATA FURNISHED TO THE ARCHITECT BY THE CONTRACTOR OR CONTRACTORS. THE ARCHITECT DOES NOT ASSURE THE ACCURACY OF THAT INFORMATION OR TAKE RESPONSIBILITY FOR ANY ERROR OR OMISSION INCORPORATED INTO THE DRAWINGS AS A RESULT. THE OWNER IS ADVISED TO OBTAIN INDEPENDENT VERIFICATION PRIOR TO USING THE INFORMATION CONTAINED HEREIN.

REVISIONS

NO.	DATE	DESCRIPTION
	01-26-08	RECORD DRAWINGS

DATE	APRIL 28, 2006
PROJECT NUMBER	05111.00 (05156.00)
SCALE	AS NOTED
DRAWN BY	RBK

FIRST FLOOR - LIGHTING PLAN

EL1.1

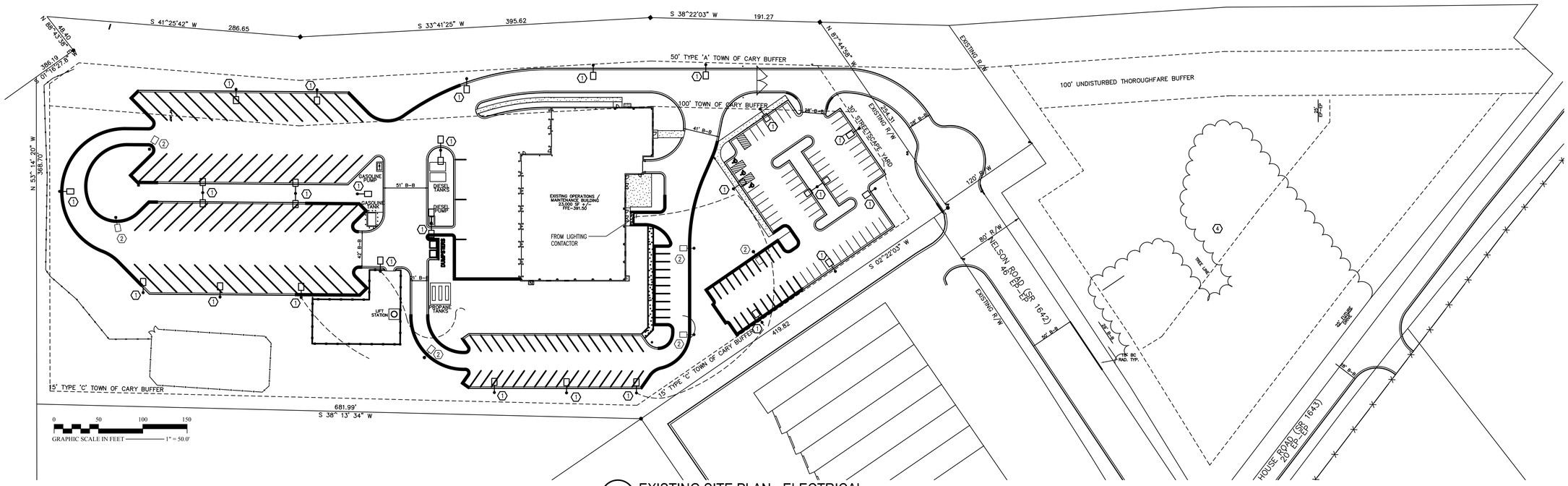

1 ES1.1 EXISTING SITE PLAN - ELECTRICAL
REFER TO GRAPHIC SCALE

SITE PLAN NOTES:

1. EXISTING POLE/LIGHT ASSEMBLY TO REMAIN.
2. EXISTING POLE/LIGHT ASSEMBLY TO BE RELOCATED. SEE NEW SITE PLAN 2/ES1.1. REMOVE EXISTING POLE BASE.
3. NEW LOCATION OF RELOCATED POLE/LIGHT ASSEMBLY. PROVIDE NEW POLE BASE TO MATCH EXISTING. RELOCATE/EXTEND EXISTING CIRCUITRY TO NEW LOCATION.
4. PARKING LOT LIGHTING TO BE PROVIDED BY PROGRESS ENERGY. GENERAL CONTRACTOR TO COORDINATE INSTALLATION OF CIRCUITRY, SLEEVES, ETC. SERVING PARKING LOT LIGHTING WITH PROGRESS ENERGY PRIOR TO INSTALLATION, GRADING, ETC.

ELECTRICAL SUMMARY

ELECTRICAL SYSTEM AND EQUIPMENT

METHOD OF COMPLIANCE:

☒ PRESCRIPTIVE ☐ PERFORMANCE ☐ ENERGY COST BUDGET

LUMINAIRE SCHEDULE LOCATED ON SHEET EL1.1

SEE LUMINAIRE SCHEDULE	LAMP TYPE REQUIRED IN LUMINAIRE
"	NUMBER OF LAMPS IN LUMINAIRE
"	BALLAST TYPE USED IN LUMINAIRE
"	NUMBER OF BALLASTS IN LUMINAIRE
"	TOTAL WATTAGE FOR LUMINAIRE
10.5 KVA VS 13.5 KVA	TOTAL INTERIOR WATTAGE SPECIFIED VS ALLOWED
	EXTERIOR SOURCES SPECIFIED ARE MINIMUM 80 LUMENS/WATT.

EQUIPMENT SCHEDULES WITH MOTORS NOT USED FOR MECHANICAL SYSTEMS) ☒ N/A

N/A	MOTOR HORSEPOWER
"	NUMBER OF PHASES
"	MINIMUM EFFICIENCY
"	MOTOR TYPE
"	NUMBER OF POLES

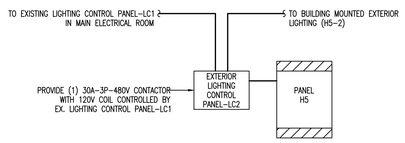

3 ES1.1 EXTERIOR LIGHTING CONTROL
NO SCALE

EXTERIOR LUMINAIRE SCHEDULE

MARK	MANUFACTURER	CATALOG NUMBER	LAMP(S) #	LAMP(S) TYPE	LAMP(S) WATT.	BALLAST(S) #	BALLAST(S) TYPE	BALLAST(S) WATT.	FIXTURE WATT.	FIXTURE VOLTAGE	MOUNTING	REMARKS
P1	LITHONIA	KSF2 SERIES									30'-0" SQUARE STRAIGHT STEEL POLE RATED FOR 100 MPH WIND'S AND 1.3 GUST FACTOR	ARCHITECTURAL ARM-MOUNTED CUTOFF AREA LIGHT/POLE ASSEMBLY; 30'-0" SQUARE STRAIGHT STEEL POLE; DARK BRONZE POLE AND LIGHT; 120/277V; SCWA BALLAST(S); REFER TO 13/E2.1 FOR POLE BASE DETAIL P1 – SINGLE HEAD POLE ASSEMBLY W/ TYPE IV CUTOFF REFLECTOR P2 – TWIN HEAD POLE ASSEMBLY W/ TYPE V CUTOFF REFLECTORS
	EMCO	ECA181 SERIES	1	CLEAR ED28 PULSE START METAL HALIDE	320	1	SCWA	270	340	120/277		
	SPAULDING	SEI SERIES										
P2	LUMARK	EQUAL	2	HORIZONTAL POSITION		2			680			
	GE	EQUAL										
K	PEACHTREE	PCTS SERIES									PENDAN MOUNTED 9'-0" AFF TO BOTTOM	NOMINAL 9" DIAMETER, 11" HIGH OPEN CYLINDER WITH (2) 26 WATT COMPACT FLUORESCENT LAMPS; 120/277V ELECTRONIC BALLAST; CLEAR ALZAK REFLECTOR; HANG STARIGHT SWIVEL STEM; – –
	GARDCO	EQUAL		TRIPLE TUBE COMPACT FLUORESCENT 4100° K								
	MCGRAW EDISON	EQUAL	2		26	1	2-LAMP ELECTRONIC	55	55	120/277		
	HUBBELL	EQUAL										
	COLUMBIA	EQUAL										
W	LITHONIA	WST SERIES		TRIPLE TUBE COMPACT FLUORESCENT 4100° K							WALL MOUNTED	ARCHITECTURAL BUILDING MOUNTED AREA LIGHT W/ (2) 42 WATT TRIPLE TUBE COMPACT FLUORESCENT LAMPS; 120/277V; ELECTRONIC BALLAST; CUSTOM COLOR TO BE DETERMINED BY ARCHITECT – –
	GARDCO	101 SERIES										
	LUMARK	PL-IP-T SERIES	2		42	1	2-LAMP ELECTRONIC	86	86	120/277		
	GE	EQUAL										
	COLUMBIA	EQUAL										

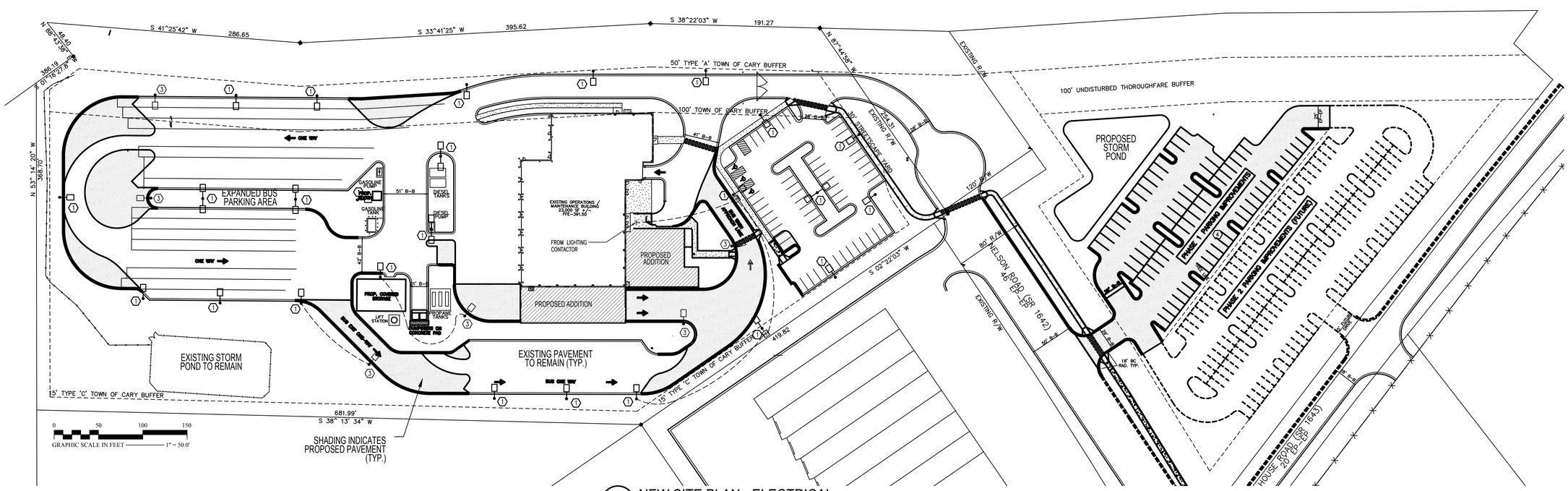

2 ES1.1 NEW SITE PLAN - ELECTRICAL
REFER TO GRAPHIC SCALE

TTA

ADDITIONS TO MAINTENANCE FACILITY

5201 NELSON ROAD (MAINTENANCE BLDG)
5210 NELSON ROAD (VACANT LOT)
CARY, NORTH CAROLINA

COMPLETE FACILITIES SOLUTIONS

MOSER MAYER PHOENIX ASSOCIATES, PA
328 E. Market Street
Suite 200
Greensboro, N.C. 27401
Telephone 336-373-9800
Fax 336-373-0077

NORTH CAROLINA PROFESSIONAL SEAL 23990 ENGINEER ROBERT B. KIME, III

MOSER MAYER PHOENIX ASSOCIATES, P.A. CERT. NO. C-784 GREENSBORO, N.C.

THIS DRAWING IS THE PROPERTY OF MOSER MAYER PHOENIX ASSOCIATES, P.A. AND IS NOT TO BE COPIED OR REPRODUCED IN PART OR WHOLE WITHOUT PERMISSION.

MULKEY ENGINEERS & CONSULTANTS
PO Box 33127
RALEIGH, N.C. 27636
(919) 851-1912
(919) 851-1918 (FAX)
WWW.MULKEYINC.COM

RECORD DRAWING DISCLAIMER

TO THE BEST OF OUR KNOWLEDGE, THESE DRAWINGS HAVE BEEN REVISED TO REFLECT CHANGES MADE DURING THE CONSTRUCTION PROCESS, BASED UPON THE MARKED-UP DRAWINGS AND OTHER DATA FURNISHED TO THE ARCHITECT BY THE CONTRACTOR OR CONTRACTORS. THE ARCHITECT DOES NOT ASSURE THE ACCURACY OF THAT INFORMATION OR TAKE RESPONSIBILITY FOR ANY ERROR OR OMISSION INCORPORATED INTO THE DRAWINGS AS A RESULT. THE OWNER IS ADVISED TO OBTAIN INDEPENDENT VERIFICATION PRIOR TO USING THE INFORMATION CONTAINED HEREIN.

REVISIONS

NO.	DATE	DESCRIPTION
1	08/15/2006	ADD ENERGY CODE STATEMENT

DATE	APRIL 28, 2006
PROJECT NUMBER	05111.00 (05156.00)
SCALE	AS NOTED
DRAWN BY	DRNBY

EXTERIOR LUMINAIRE SCHEDULE; SITE PLAN

ES1.1

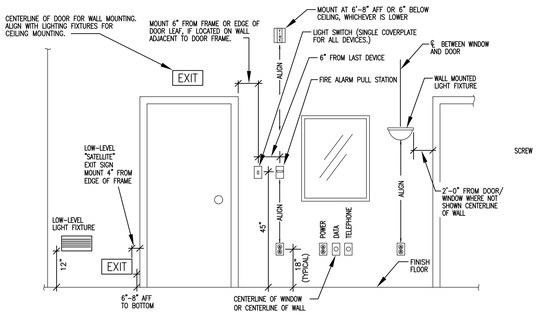

NOTE: ANY SPECIFIC DIMENSIONING OR INSTRUCTIONS GIVEN ELSEWHERE ON THE DRAWINGS SHALL SUPERSEDE THESE INSTRUCTIONS.

1 E2.1 MOUNTING HEIGHTS AND ALIGNMENT CRITERIA
NO SCALE

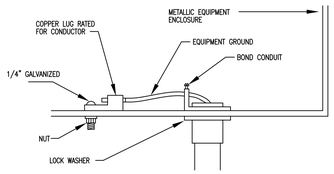

NOTES:

1. ONE WIRE PER LUG HOLE. USE MULTIPLE BARREL LUGS AS REQUIRED.
2. SCRAPE PAINT FROM UNDER LUG TO ASSURE METAL CONTACT.

2 E2.1 TYPICAL EQUIPMENT GROUNDING
NO SCALE

PANEL "A"
120/208V, 3ø4W, 225A
FED FROM MDP-21
INSTALLED 12/23/97

DISC AHU#1
480V, 3ø3W, 100A
FED FROM MDP-21,23,25
INSTALLED 12/23/97

PANEL "AA"
120/208V, 3ø4W, 225A
SUB-FED FROM PNL "A"
INSTALLED 12/23/97

NOTES:

1. REFER TO SPECIFICATION SECTION 16195 FOR ADDITIONAL INFORMATION.
2. SUBMIT COMPLETE LIST OF PROPOSED NAMEPLATES TO ARCHITECT/ENGINEER FOR APPROVAL PRIOR TO FABRICATION.

3 E2.1 TYPICAL NAMEPLATE DETAIL
NO SCALE

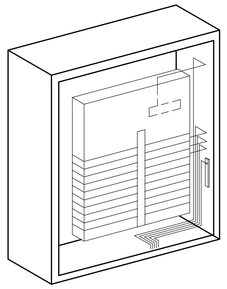

NOTES:

1. ALL BENDS IN CONDUCTORS #10 AND SMALLER SHALL BE 90 DEGREES STRAIGHT AND TRUE. BENDS IN LARGER SIZE CONDUCTORS SHALL HAVE A UNIFORM RADIUS.
2. BEND CONDUCTORS TOWARD THE BACK CORNERS OF THE PANEL CAN. BEND CONDUCTORS FORWARD TO CONNECT TO CIRCUIT BREAKERS.
3. TIE WRAP CONDUCTORS TO FORM NEAT AND ORDERLY BUNDLES. AVOID EXCESSIVE USE OF TIE WRAPS.
4. NO CONDUCTORS SHALL TOUCH PANEL CAN.
5. FINISHED PANEL SHALL PRESENT A CLEAN, SHARP, AND ORDERLY APPEARANCE.
6. EACH ELECTRICAL PANEL SHALL HAVE: 1. AN ENGRAVED NAMEPLATE PERMENANTLY ATTACHED TO THE EXTERIOR COVER, 2. A TYPEWRITTEN CIRCUIT DIRECTORY INSIDE EACH DOOR, 3. A TYPEWRITTEN WIRING COLOUR CODE INSIDE EACH DOOR.

4 E2.1 TYPICAL PANELBOARD WORKMANSHIP
NO SCALE

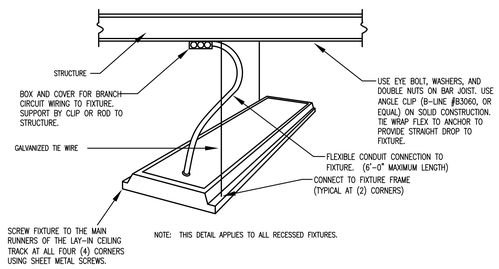

NOTE: THIS DETAIL APPLIES TO ALL RECESSED FIXTURES.

5 E2.1 TYPICAL RECESSED FIXTURE SUPPORT
NO SCALE

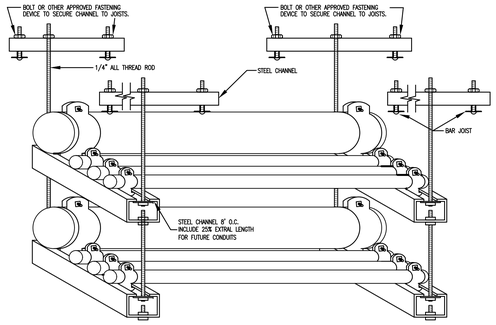

6 E2.1 TYPICAL CONDUIT SUPPORT DETAIL
NO SCALE

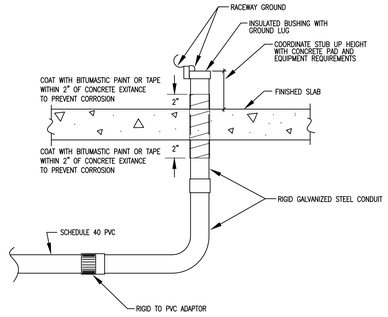

NOTE: THIS DETAIL APPLIES TO ALL UNDERGROUND CONDUITS WHERE PVC IS UTILIZED AND/OR WHERE STEEL CONDUIT PENETRATES CONCRETE. PVC SHALL NOT BE EXTENDED ABOVE GRADE UNLESS SPECIFICALLY APPROVED.

7 E2.1 TYPICAL CONDUIT STUB UP
NO SCALE

NOTES:

1. THE ELECTRICAL CONTRACTOR SHALL VERIFY THE LOCATIONS, MOUNTINGS, AND EXACT REQUIREMENTS OF ALL EQUIPMENT BEFORE PROCEEDING WITH WORK.

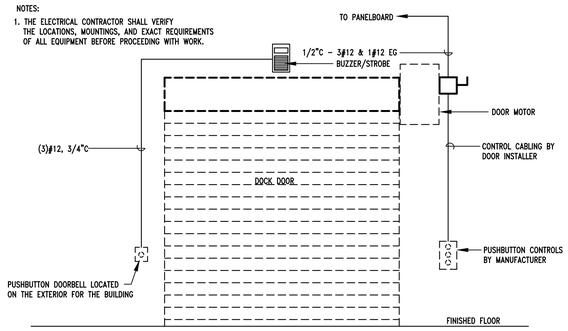

8 E2.1 TYPICAL MOTORIZED DOOR CONNECTIONS
NO SCALE

NOTES:

1. TRANSFORMER BONDING STRAP. IF NOT PROVIDED BY THE TRANSFORMER MANUFACTURER, THIS STRAP SHOULD BE THE SAME SIZE AS THE MAIN BONDING JUMPER. (TABLE 250-66 OR 250-28D)
2. USE A BONDING BUSHING AND JUMPER AT THE CONDUIT TERMINATION. JUMPER SHOULD BE THE SAME SIZE AS THE GROUNDING ELECTRODE CONDUCTOR CONTAINED IN THE CONDUIT.
3. USE A BONDING CLAMP AT THE TERMINATION OF THE GROUNDING ELECTRODE CONDUCTOR TO THE ELECTRODE.

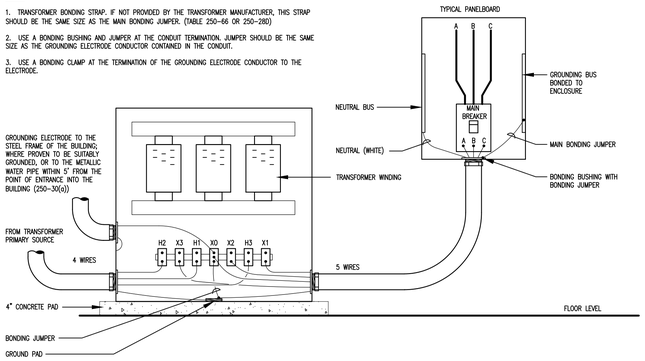

9 E2.1 TYPICAL DRY-TYPE TRANSFORMER GROUNDING
NO SCALE

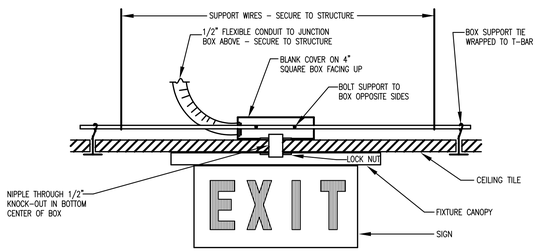

10 E2.1 EXIT LIGHT MOUNTING AT CEILING
NO SCALE

NOTES:

1. POLE MANUFACTURERS' SPECIFIC REQUIREMENTS SHALL SUPERCEDE INFORMATION AS SHOWN.
2. DIMENSIONS "A" AND "B" SHALL BE DETERMINED BY STRUCTURAL ENGINEER.
3. REINFORCING BARS SHALL BE BONDED TOGETHER AND TO ANCHOR BOLTS.

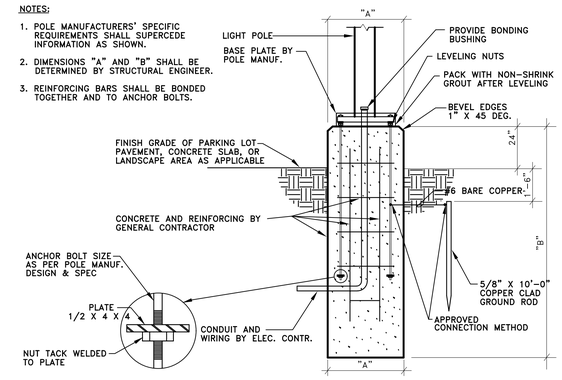

13 E2.1 TYPICAL LIGHT POLE BASE
NO SCALE

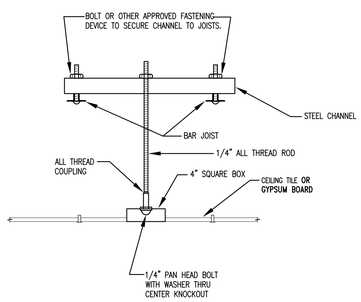

11 E2.1 CEILING BOX SUPPORT DETAIL
NO SCALE

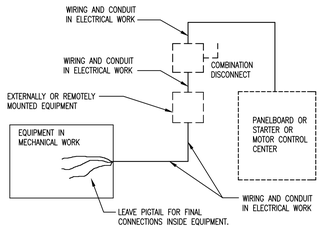

NOTES:

A. RESPONSILIBITY: UNLESS OTHERWISE INDICATED, ALL MOTORS AND CONTROLS SHALL BE FURNISHED, SET IN PLACE AND WIRED IN ACCORDANCE WITH THE TABLE AND DETAIL

B. REFER TO SECTION 15030-B AND ELECTRICAL DRAWINGS FOR REQUIREMENTS WHERE THE USE OF A MOTOR CONTROL CENTER IS FURNISHED UNDER DIVISION 16 WORK BY THE EC.

ITEM	FURNISHED UNDER	SET IN PLACE OR MOUNTED UNDER	WIRED AND CONNECTED UNDER
EQUIPMENT MOTORS, RESISTANCE HEATERS	MC	MC	EC
MOTOR CONTROLLERS; MAGNETIC STARTERS, REDUCED VOLTAGE STARTERS AND OVERLOAD RELAYS	MC	MC	EC
DISCONNECT SWITCHES, FUSED OR UNFUSED, HP RATED SWITCHES, THERMAL OVERLOAD SWITCHES AND FUSES, MANUAL OPERATING SWITCHES, THERMAL OVERLOADS	EC(1)	EC(1)	EC
REDUCED VOLTAGE CONTROLS	MC	MC	MC
LINE VOLTAGE CONTROLS (2)	MC	MC	MC
DUCTMOUNTED FIRE & SMOKE DETECTORS (FOR HVAC EQUIPMENT)	MC/EC(5)	MC	MC(4)/EC(3)

1. UNLESS SCHEDULED/SPECIFIED TO BE PROVIDED AS A FACTORY MOUNTED ITEM.
2. THOSE CONTROLS WHICH CARRY FULL LOAD METER CURRENTS OR OPERATE AT NOMINAL 120 V. TO GROUND OR LESS.
3. WIRING THROUGH PRIMARY CONTACTS OF THE DETECTOR TO ALARM SYSTEM BY EC. ALARM SYSTEM FURNISHED BY EC.
4. MC TO WIRE AUXILIARY CONTACTS OF DETECTOR THROUGH ASSOCIATED UNIT'S CONTROL CIRCUIT IN ORDER TO DE-ENERGIZE THE OPERATION OF THE FAN TO PREVENT THE SPREAD OF SMOKE/FIRE UPON ACTIVATION.
5. FURNISHED BY EC IF THE FIRE ALARM SYSTEM IS EXISTING OR IS TO BE PROVIDED BY THE EC. IF NO FIRE ALARM SYSTEM EXISTS OR IS TO BE PROVIDED, THEN THE MC IS TO FURNISH IN ACCORDANCE WITH THE REQUIREMENTS OF NFPA 90A, CURRENT EDITION.

12 E2.1 ELECTRICAL CONNECTIONS TO HVAC EQUIPMENT
NO SCALE

TTA

ADDITIONS TO MAINTENANCE FACILITY

5201 NELSON ROAD (MAINTENANCE BLDG)
5210 NELSON ROAD (VACANT LOT)
CARY, NORTH CAROLINA

COMPLETE FACILITIES SOLUTIONS

MOSER MAYER PHOENIX ASSOCIATES, PA

328 E. Market Street
Suite 200
Greensboro, N. C. 27401
Telephone 336-373-9800
Fax 336-373-0077

NORTH CAROLINA PROFESSIONAL SEAL 23990 ENGINEER ROBERT B. KIME, III

MOSER MAYER PHOENIX ASSOCIATES, P.A. NORTH CAROLINA ENGINEERING CORPORATION CERT. NO. C-784 GREENSBORO, N.C.

THIS DRAWING IS THE PROPERTY OF MOSER MAYER PHOENIX ASSOCIATES, P.A. AND IS NOT TO BE COPIED OR REPRODUCED IN PART OR WHOLE WITHOUT PERMISSION.

MULKEY ENGINEERS & CONSULTANTS
PO Box 33127
Raleigh, N.C. 27636
(919) 851-1912
(919) 851-1918 (FAX)
WWW.MULKEYINC.COM

RECORD DRAWING DISCLAIMER

TO THE BEST OF OUR KNOWLEDGE, THESE DRAWINGS HAVE BEEN REVISED TO REFLECT CHANGES MADE DURING THE CONSTRUCTION PROCESS, BASED UPON THE MARKED-UP DRAWINGS AND OTHER DATA FURNISHED TO THE ARCHITECT BY THE CONTRACTOR OR CONTRACTORS. THE ARCHITECT DOES NOT ASSURE THE ACCURACY OF THAT INFORMATION OR TAKE RESPONSIBILITY FOR ANY ERROR OR OMISSION INCORPORATED INTO THE DRAWINGS AS A RESULT. THE OWNER IS ADVISED TO OBTAIN INDEPENDENT VERIFICATION PRIOR TO USING THE INFORMATION CONTAINED HEREIN.

REVISIONS

NO.	DATE	DESCRIPTION
	01-26-08	RECORD DRAWINGS

DATE	APRIL 28, 2006
PROJECT NUMBER	05111.00 (05156.00)
SCALE	NO SCALE
DRAWN BY	RBK

ELECTRICAL POWER DETAILS

E2.1